PRIME

Preliminary Documentation Release

COPYRIGHT 1977

NOV. 1977.

PDR3105
THE
SYSTEM INSTALLERS
GUIDE

96. PAGES.

P/N 3064-001

ØØAPR82

This guide tells you how to prepare for and manage the installation of your new Prime computer system. It presents Prime's recommendations concerning tasks which are the customer's responsibility, such as site preparation and the coordination of the installation process.

This guide also describes installation services which Prime provides for systems that qualify under the conditions of the sale.

Proper use of this guide should lead to a speedy and efficient installation of your Prime system.

All correspondence on suggested changes to this document should be directed to:

Robert Russo, Technical Writer
Technical Publications Department
Prime Computer, Inc.
145 Pennsylvania Avenue
Framingham, MA 01701

Acknowledgements:

We wish to thank the members of the SYSTEM INSTALLERS GUIDE team and also the non-team members, both customer and Prime, who contributed to and reviewed this PDR.

PDR 3105

PRIME DOCUMENTATION TYPES

IDR Initial Documentation Release: provides usable, accurate advanced information without regard to style and format.

PDR Preliminary Documentation Release: provides more complete and accurate information about the product, but is not in final format.

FDR Final Documentation Release: a complete product description: edited, formatted and produced at a high standard of graphic quality.

MAN Manual: early reference documents to be phased out by PDR's and FDR's.

PTU Prime Technical Update: interim updates to existing documents.

Copyright 1977 by
Prime Computer, Incorporated
145 Pennsylvania Avenue
Framingham, Massachusetts 01701

The information in this document is subject to change without notice and should not be construed as a commitment by Prime Computer Corporation. Prime Computer Corporation assumes no responsibility for any errors or omissions in this document.

First Printing November 1977

CONTENTS

	Page
SECTION 1 INTRODUCTION	
SCOPE	1-1
CONTENT	1-1
RECOMMENDED USAGE	1-2
Planning and Preparation	1-2
Pre-Installation	1-2
Installation	1-2
PRODUCTS APPLICABLE	1-2
Cabinet-Mounted Systems	1-3
Cabinet-Mounted Peripherals	1-4
Cabinet-Mountable Peripherals	1-4
Prime Cabinets	1-4
Free-Standing Peripherals	1-5
INTERFACE MODULES	1-5
DOCUMENTATION	1-7
SOFTWARE	1-7
SECTION 2 SITE PLANNING AND PREPARATION	
RESPONSIBILITIES	2-1
SITE LOCATION	2-1
COMPUTER FACILITY	2-1
LAYOUT	2-2
ELECTRICAL	2-3
ENVIRONMENTAL	2-6
SCHEDULING	
LIAISON	2-7
DOCUMENTATION	2-7
SAFETY	2-7
SPECIFIC EXAMPLE	2-8
Layout Templates	2-8
Floor Plan	2-10
Evaluation of Floor Plan	2-10
Ceiling Clearance	2-10
Weight Considerations	2-12
AC Outlets	2-12
Computer-Room Wiring	2-12
Environmental Operating Requirements	2-14
Conclusion	2-14

PDR 3105

CONTENTS (Cont'd)

	Page
SECTION 3 PRE-INSTALLATION ACTIVITIES	
RESPONSIBILITIES	3-1
PRE-SHIPMENT	3-1
INSPECTION	3-1
UNPACKING	3-1
DELIVERED SOFTWARE ITEMS	3-5
READINESS OF SITE	3-5
CUSTOMER DAMAGE CLAIMS	3-5
SECTION 4 INSTALLATION	
RESPONSIBILITIES	4-1
RECOMMENDED INSTALLATION GUIDELINES	4-1
Equipment Positioning	4-1
Equipment Leveling	4-1
Grounded AC Power System	4-2
System Grounding	4-2
Site Compatibility	4-4
Cables	4-4
Shipping Restraints	4-6
Layout of Cables	4-6
Cable Connections - Mainframe Cabinets Only	4-8
PDU Interconnections	4-9
Cable Connections - Peripheral Cabinets	4-13
Cable Connections - Free-Standing Peripherals	4-14
Power Connections - Peripheral Cabinets (USA)	4-14
Power Connections - Free-Standing Peripherals (USA)	4-15
Power Connections - Mainframe and Peripheral Cabinets (International)	4-15
Power Connections - Free-Standing Peripherals (International)	4-15
Pre-Startup Checkout	4-15
Initial Startup	4-16
Static Tests	4-17
Power Up All Systems	4-17
Dynamic Tests	4-17
Quality Audit Report Format	4-17

CONTENTS (Cont'd)

		Page
APPENDIX A	GENERAL GUIDELINES FOR EQUIPMENT SPECIFICATION TABLES	A-1
Table A-1.	Cabinet-Mounted Systems	A-8
Table A-2.	Cabinet-Mounted Peripherals	A-9
Table A-3.	Cabinet-Mountable Peripherals	A-10
Table A-4.	Prime Cabinets	A-12
Table A-5.	Free-Standing Peripherals	A-13
APPENDIX B	CABLE IDENTIFICATION DATA	
Table B-1.	Cabinet-Mounted Peripherals	B-2
Table B-2.	Cabinet-Mountable Peripherals	B-3
Table B-3.	Free-Standing Peripherals	B-5
Table B-4.	Teletypes, Terminals and User Terminals	B-8
APPENDIX C	LAYOUT TEMPLATES	C-1
APPENDIX D	GROUNDING SPECIFICATION	D-1

PDR 3105

ILLUSTRATIONS

Figure No.	Title	Page
1-1	A Cabinet-Mounted System	1-3
1-2	A Cabinet-Mounted Peripheral	1-4
1-3	Cabinet-Mountable Peripherals	1-5
1-4	Examples of Free-Standing Peripherals	1-6
2-1	Power Distribution System Commonly Available at Many Business Offices (USA)	2-5
2-2	Power Distribution System Commonly Available at Many Large Industrial Complexes (USA)	2-6
2-3	Sales Order and Equipment List	2-9
2-4	Floor Plan Suitable for Specific Example	2-11
2-5	Electrician's Copy of System Installers Worksheet	2-13
2-6	The Completed Computer Room	2-15
3-1	Typical Packaged Shipment and Minimum Contents	3-2
3-2	Typical Packing List for Hardware	3-3
4-1	Adjustable Leveling Pads	4-2
4-2	Equipment Grounding Diagrams	4-3
4-3	A Typical Interconnecting Cable	4-4
4-4	Layout of Cables and Equipment	4-7
4-5	Cable Connections at Mainframe System	4-8
4-6	Domestic Mainframe PDU	4-10
4-7	PDU for International Mainframe and All Peripheral Cabinets	4-11
4-8	PDU - Control Panel Interconnections	4-12
4-9	Quality Audit Report Format (Sheets 1 and 2)	4-18

ILLUSTRATIONS (Cont'd)

Figure No.	Title	Page
A-1	Electrician's Worksheet	A-6
C-1	Layout Templates (Sheet 1 of 5)	C-2
C-2	Layout Templates (Sheet 2 of 5)	C-3
C-3	Layout Templates (Sheet 3 of 5)	C-4
C-4	Layout Templates (Sheet 4 of 5)	C-5
C-5	Layout Templates (Sheet 5 of 5)	C-6

PDR 3105

GLOSSARY

The following abbreviations, acronyms, qualifiers, symbols or terms have been used throughout this text. Symbols are industry standard.

SYMBOL OR TERM	EXPLANATION
AC	alternating current
AWG	American wire guage
A	ampere
BTU	British Thermal Unit
cm	centimeter
CFM	cubic feet/minute
^{o}C	degrees Celsius
^{o}F	degrees Fahrenheit
FM	frequency modulated
DC	direct current
HVAC	heating, ventilation, and air conditioning
Hz	Hertz (cycles per second)
IAF	installed at factory
in.	inches
lbs	pounds
m	meter
mm	millimeter
MOS	metal oxide semiconductor
MSL	mean-sea level
OEM	original-equipment manufacturer
PDU	power distribution unit
PRIMOS	prime operating system
PS	power supply
RFI	radio frequency interference
V	volt
VAC	volts alternating current
W	watts
⏚	ground, earth/building
⏚	ground, frame

SECTION 1

INTRODUCTION

SCOPE

This guide is written for the customer who must prepare for and coordinate the installation of Prime products. The information provided permits advance planning and preparation of sites, and rapid and efficient installation of Prime systems or equipment on site. This guide also defines the services provided by Prime for those systems that contractually qualify. Products applicable to site preparation and installation are those mounted in cabinets or capable of stand-alone operation.

CONTENT

The User Guide for the System Installer consists of four sections and four appendices.

• Section 1	States purposes, recommends how to use the guide and briefly describes products, documentation and software.
• Section 2 Site Planning and Preparation	Specifies parties responsible for planning and preparation of installation sites, gives site planning considerations and presents an example of a typical site preparation based on a specific sales order.
• Section 3 Pre-Installation	Specifies parties responsible, lists pre-installation activities and provides unpacking and inspection instructions.
• Section 4 Installation	Specifies parties responsible for installation and gives installation guidelines.
• Appendix A Equipment Specification Tables	Lists the physical, environmental and electrical particulars of all applicable products currently marketed by Prime, and presents a worksheet to be used as an aid for an electrician.
• Appendix B Interconnection Cables	Lists interconnection cables provided with products currently marketed by Prime.
• Appendix C Layout Templates	Gives layout templates (drawn to scale) for all categories of applicable Prime products.

PDR3105

• Appendix D Grounding Specification	Specifies grounding requirements for installation sites.

RECOMMENDED USAGE

The sections and appendices of this user guide are to be used at various stages of the installation cycle.

Planning and Preparation

Section 2 and Appendix A are to be used to familiarize the customer with computer-room and product requirements. It is recommended that the customer initiate the planning effort by comparing his sales order equipment list with the Equipment Specification Tables (Appendix A). Next, the customer examines his facility to determine if it conforms to the general guidelines of Section 2. If necessary, the customer modifies his facility to meet the product requirements of Appendix A in accordance with the general guidelines of Section 2. (A specific example is given in Section 2 to aid the customer in planning the site-preparation effort, and an Electrician's Worksheet is given in Appendix A to aid the electrician in preparing the site for installation of Prime products.)

Pre-Installation

Section 3 is to be used to familiarize the customer with pre-installation activities such as mandatory requirements for newly-delivered products. The packaging of products prior to delivery, the handling of products during transit, the inspection and unpacking of products upon delivery, the handling of customer damage claims and the inspection of installation sites are discussed.

Installation

Section 4, Appendix B and Appendix D are to be used to familiarize the customer with the installation tasks to be performed by the Prime field service representatives for those systems that contractually qualify. Section 4 includes guidelines for alignment and leveling of cabinets and peripherals, for verification of site power and grounding requirements, for verification that the proper cables and power cords have been delivered, for layout of cables and power cords, for interconnection of cables and power cords, for application of power to cabinets and peripherals and for operating and demonstrating the installed equipment and software. Interconnection cables are listed in Appendix B; grounding requirements are listed in Appendix D.

PRODUCTS APPLICABLE

Only those products that require installation at the customer's site are applicable. This includes cabinet-mounted systems, cabinet-mounted peripherals, cabinet-mountable peripherals, Prime cabinets and free-standing peripherals. Modular assemblies such as printed circuits or

power supplies are not discussed separately because they are normally installed in their next higher assemblies at the factory, and are delivered to the customer as part of a cabinet-mounted system or peripheral.

Cabinet-Mounted Systems (Table A-1, Appendix A)

A cabinet-mounted system (Figure 1-1) constitutes a mainframe system mounted in a mainframe cabinet. Cabinet-mounted systems are ordered either as central systems, product series CX-XXXX-XX(A), or as combinations of a mainframe systems and mainframe cabinets, product series numbers PX-XXXX-XX(A) and 7520-901A. Central systems include two installable units: a cabinet-mounted system (refer to its CX-XXXX-XX(A) number in the Equipment Specification Table A-1, Appendix A) and a system console (Terminet 30; refer to product 3111(A) in the Equipment Specification Table A-5, Appendix A).

Mainframe system and mainframe cabinets are delivered mounted one in the other as cabinet-mounted systems. Reference should be made to the equivalent central-system product number (CX-XXXX-XX(A)) in the Equipment Specification Table A-1, Appendix A. For example, if products PE-064B-10 and 7520-901 are line items on a sales order, they should be referenced as a cabinet-mounted system under product number C3-XXXX-10.

If mainframe systems are ordered without mainframe cabinets, installation information can be found under separate cover, SPC2892, 'CHASSIS MOUNTING FOR OEM'S' (delivered with mainframe system).

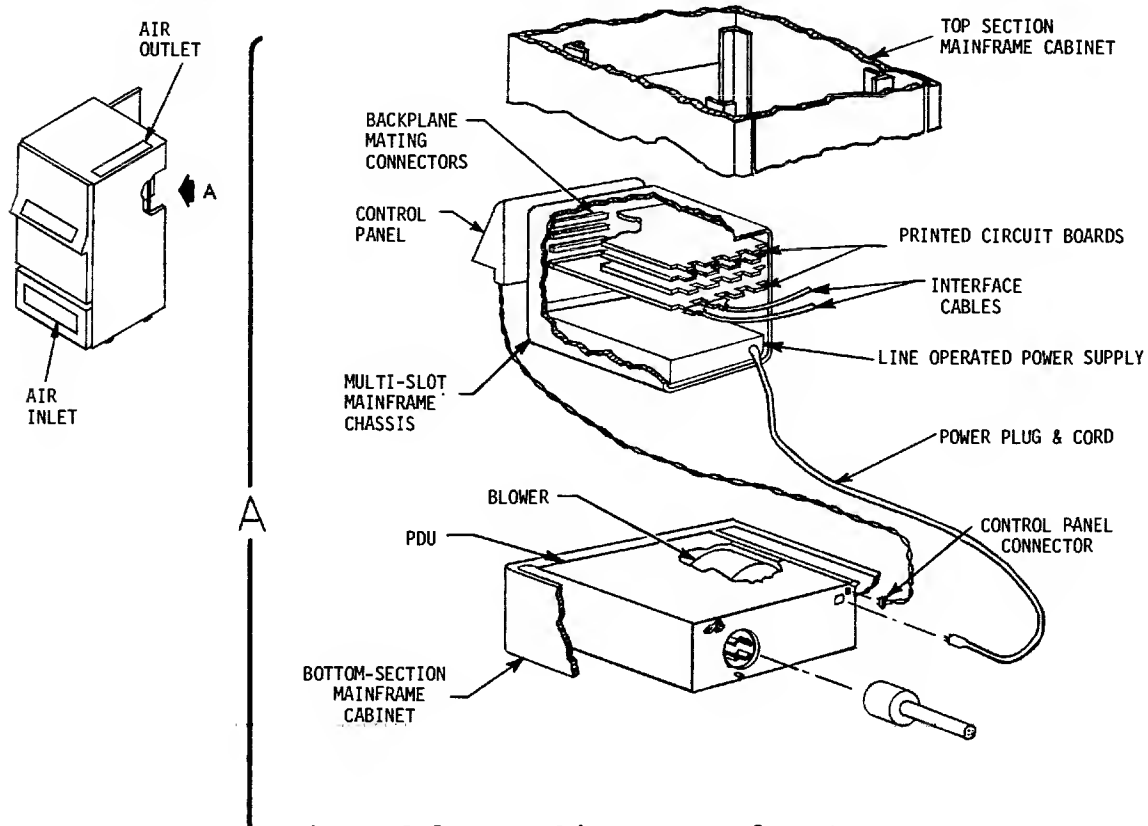

Figure 1-1. A Cabinet-Mounted System

Cabinet-Mounted Peripherals (Table A-2, Appendix A)

Magnetic tape transports are always installed in peripheral cabinets prior to shipment and delivered as cabinet-mounted peripherals. (Refer to Figure 1-2 for an illustration of a peripheral cabinet that incorporates a tape transport unit and a PDU and blower assembly.)

Cabinet-Mountable Peripherals (Table A-3, Appendix A)

Cartridge disk drives, diskette drives and paper tape reader/punches are normally installed in either mainframe or peripheral cabinets prior to shipment and delivered as cabinet-mounted peripherals even though they are capable of stand-alone operation. (Refer to Figure 1-3 for an illustration of a separately-ordered peripheral cabinet with PDU and blower assembly that incorporates four cartridge disk-drive units.)

Prime Cabinets (Table A-4, Appendix A)

Mainframe cabinets (Products 7520-901 and 7520-901A) are normally delivered as part of central systems. Peripheral cabinets (Product 7520-902 and 7520-902A) are delivered as part of magnetic tape-transport subsystems, or they can be ordered separately for cabinet-mountable peripherals. Both types of cabinets provide AC power distribution with circuit-breaker protection and ventilation for cabinet-mounted (or mountable) systems and peripherals. Consult Tables A-3 and A-4 for equipment-specifications applicable to cabinet-mountable peripherals and Prime cabinets.

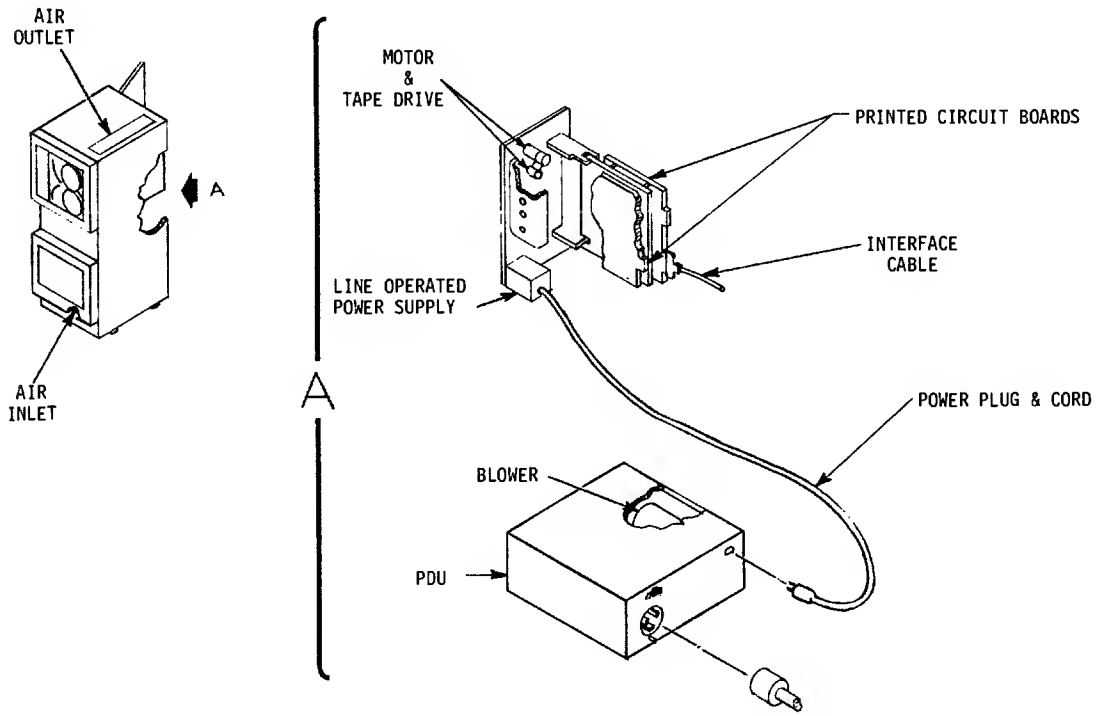

Figure 1-2. A Cabinet-Mounted Peripheral

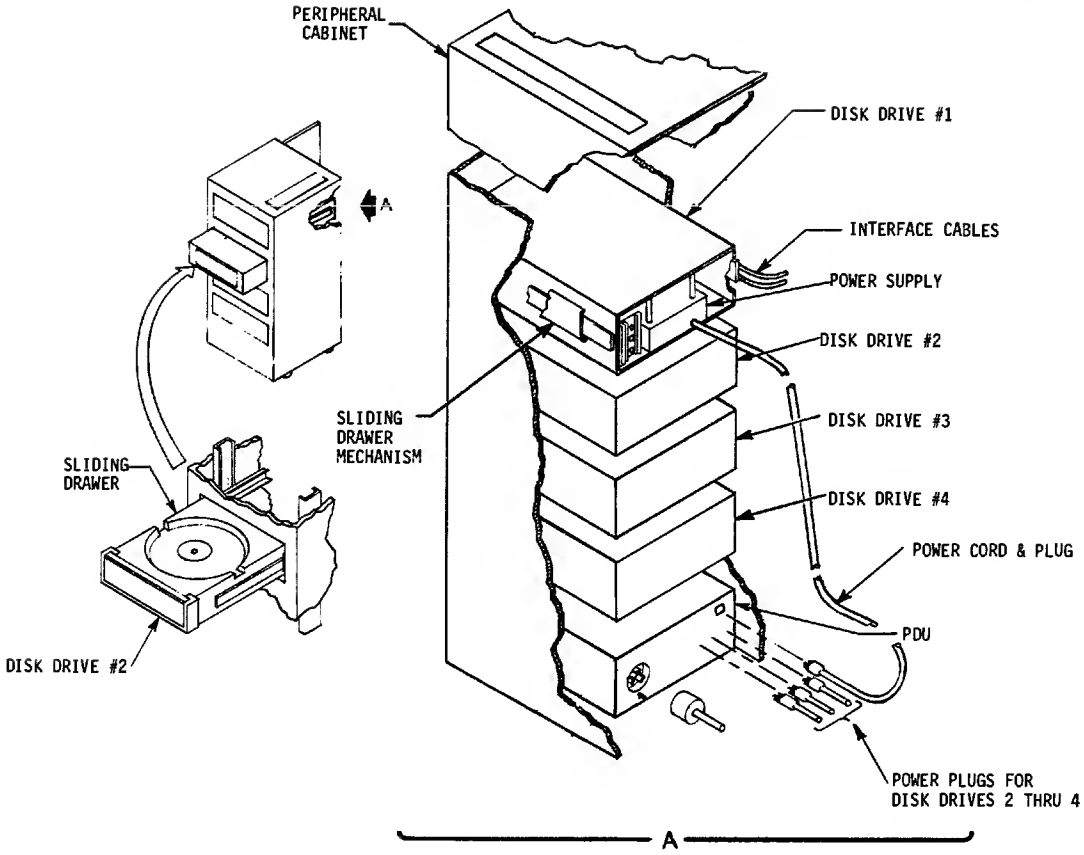

Figure 1-3. Cabinet-Mountable Peripherals

Free-Standing Peripherals (Table A-5, Appendix A)

Peripheral devices mounted in their own enclosures are considered free-standing. Such devices which include disk storage modules, printers, printer/plotters and terminals are normally equipped with line-operated power supplies and power cords for direct connection to standard AC wall sockets or AC power lines. (Refer to Figure 1-4 for typical examples of this category of product.) Interface cables are provided with all free-standing peripherals except for video-display terminals. (Refer to Table B-3, Appendix B for a listing of cables provided.) Cables for video-display terminals must be ordered separately.

INTERFACE MODULES

Communications (Series 5XXX), data acquisition/control (Series 6XXX) or general-purpose interface modules (printed circuits) can be delivered as part of a Prime central system (inserted into various slots on a Prime mainframe chassis). The customer's needs may include the transfer of data via a data set or modem for example. On-site interconnection of data sets, modems or devices not marketed by Prime is the customer's responsibility in all cases. However, Prime will install networks of Prime systems connected by interprocessor controllers (ICP, type 703X).

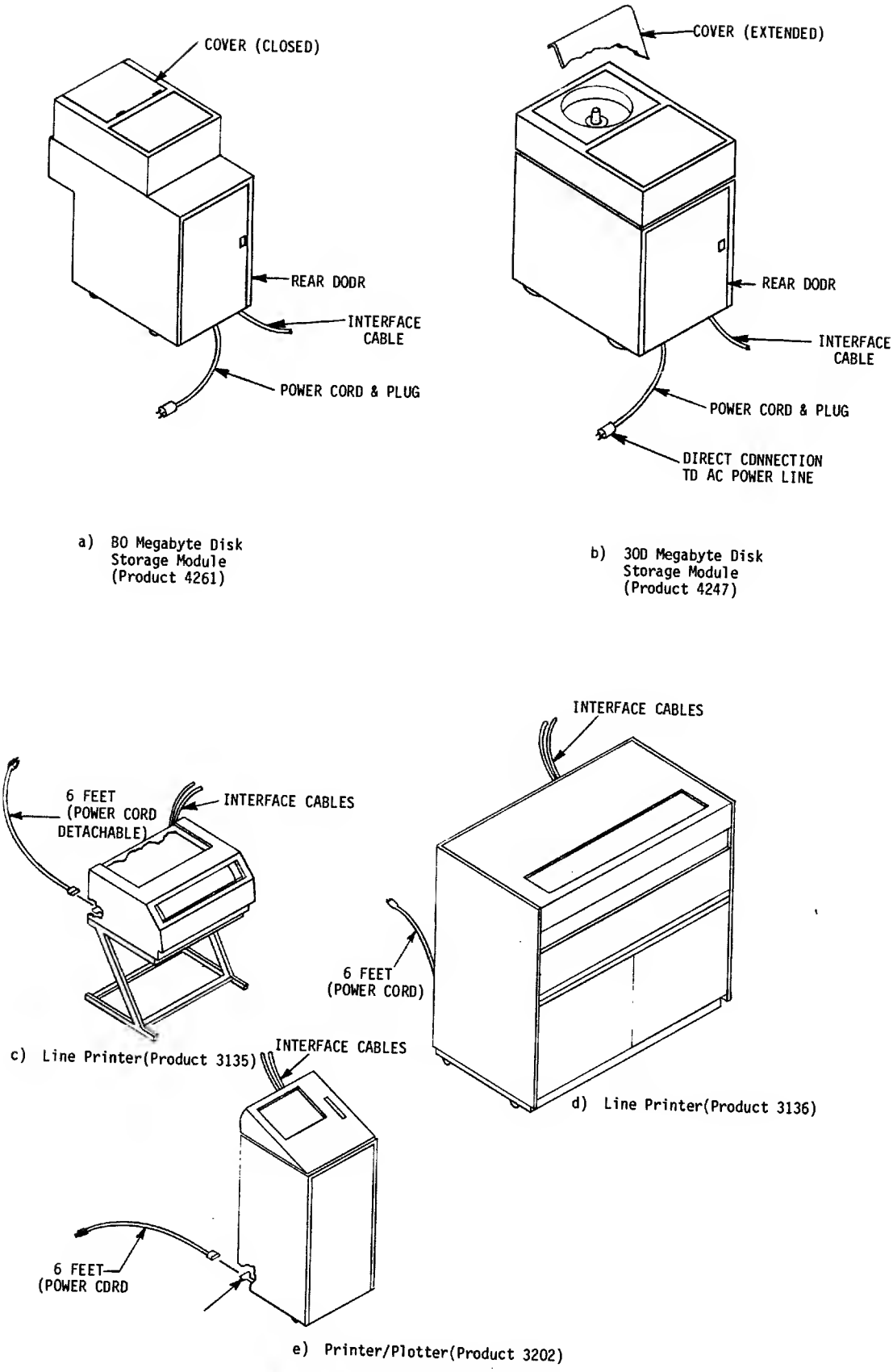

Figure 1-4. Examples of Free-Standing Peripherals

DOCUMENTATION

Technical publications (Prime User Guides, Logic Diagram Sets, and OEM manuals) will be provided with delivered systems and equipment as necessary to support installation planning, installation, operational demonstrations and testing of installed systems and equipment.

SOFTWARE

Unless specified otherwise in the sales order, a packaging of unpriced software (PRIMOS) including one or more Prime Operating Systems will be shipped with the systems and equipment for demonstration purposes. Priced software is shipped in accordance with the sales order. Such software may be delivered in magnetic tapes, magnetic disks, or diskettes.

SECTION 2

SITE PLANNING AND PREPARATION

RESPONSIBILITIES

The customer is responsible for providing a suitable site and all installation-related planning and site preparation. Prime is responsible for providing installation-related planning documentation and consulting services as necessary to support the site planning and preparation effort for those systems that contractually qualify. The planning documentation permits the customer to select the best possible installation site and prepare it for installation of Prime products in advance of delivery. Overall dimensions, weights, electrical power requirements, environmental operating limitations and altitude limitations (where applicable) are given for each product. The customer is responsible to order modification kits when specified altitude limitations are exceeded.

SITE LOCATION

The customer should consider all limitations of a particular location before selecting it as an installation site:

Altitude

The site may be located at zero to 10,000 feet above sea level unless specified otherwise in the Equipment Specification Table provided by Prime.

Radiation

Unless provisions have been made for suitable shielding, the site should not be located in close proximity to RFI generating equipment, FM radio, radar, TV, etc.).

Outside Atmosphere

The site should not be located in an excessively hostile climate, an excessively dusty environment or within an environment that makes HVAC planning difficult or costly.

COMPUTER FACILITY

The customer should consider all facility limitations before approving it for installation of particular products.

Building

A suitable building is one structured to support the total weight of the system or equipment delivered, and having passageways and doorways sufficient to allow unobstructed movement of crated equipment from receiving platform to installation locations.

Space

A partitioned enclosure (computer-room) of inside overall dimensions suitable to allow storage, unpacking, inspection, installation of equipment delivered, operational verification and test of equipment installed and future expansion of a computer facility that should comply with local and national fire protection and safety codes.

Flooring

Hard-surface, non-conductive flooring or special anti-static carpeting woven with conductive fibers.

LAYOUT

The proper layout of equipment and furniture within the computer-room ensures the best possible utilization of space, and assures convenient operator access to equipment allowing efficient operation, service and maintenance. It is advisable to prepare a floor plan that shows the proposed locations and arrangement of equipment and furniture to be installed in relation to the physical limitations of the computer-room. Such a plan should be based on the number of square feet of floor space available and the floor-space requirements of the particular units of hardware ordered. Floor-space requirements for particular products are given in the form of layout templates (Appendix C, herein). Other factors to be considered when preparing the layout include:

Obstructions

Number of permanent obstructions existing within the partitioned enclosure selected.

Floor

Loading capability of the partitioned enclosure's floor.

Door Clearance

Adequate clearance space for opening and closing of computer-room doors, and to allow movement of uncrated equipment into the computer-room.

Windows

Location, number and type of windows relative to proposed equipment locations that may expose installed equipment to sunlight during normal operation.

Ventilation and Heating Ducts

Location of HVAC inlets relative to proposed equipment that may expose installed equipment to the flow of warm or cold air, or to undesired particles of dirt during normal operation.

Power Distribution Lines

Location and number of AC receptacles relative to proposed equipment locations.

Minimum Working Access (Cabinets)

36 inches, rear and top
52 inches, front
18 inches, front left and right flanks

Minimum Working Access (Free-Standing) Peripherals

36 inches, rear, top and front

Additional Space

Space available for storage of equipment and future expansion of the computer-room.

Cable Protection

Protective devices for cables and power cords (raised floor, hanging ceiling or floor-level covering).

Cabinet Location

Prime recommends that mainframe and peripheral cabinets be installed at abutting locations within the computer room.

Cable Lengths

Overall lengths of power cords and cables supplied with the ordered hardware and equipment.

ELECTRICAL

The customer should verify the availability of adequate commercial AC power on site.

Mainframe Cabinets

The domestic mainframe cabinet can be powered from a 30-amp, 120/240 volt service or a 120/208 volt service; the international mainframe cabinet can be powered from a 30-amp, 230-volt service.

Peripheral Cabinets

The domestic peripheral cabinet can be powered from a 30-amp, 120-volt service; the international peripheral cabinet can be powered from a 30-amp, 230-volt service.

Free-Standing Peripherals

Most free-standing peripherals can be powered from standard, American style, 15-amp, 120-volt wall sockets except for charaband printers, card reader/punches and 300-megabyte disk-storage modules which require 20-amp, 208-volt power lines. Free-standing peripherals shipped to sites outside the USA can be powered from any type of outlet that conforms to local and national electrical standards. If the American style plugs shipped with free-standing peripherals are incompatible to mate with AC wall outlets found in international sites, Prime will replace the plugs as necessary to meet individual site requirements.

Electrical Interference

The immediate electrical power environment of the computer room should be free of the undesired affects of electrical apparatus operating in close proximity to the computer-system branch circuit. It is possible that transients or excessive electrical noise emanating from neighboring devices could be induced into the branch circuit for the computer system (even though the source may be operating on a separate circuit). Precautions should be considered by the customer to ensure that no such conditions exist within the immediate neighborhood of the computer room. Air-conditioning devices, electric furnaces, elevators, electrostatic copying machines, X-ray machines, electric welding machines and large, brush-type motors are common sources of electrical noise.

Power Sources

Standard Prime products (cabinets and free-standing peripherals) can share primary power with a variety of electrical devices provided that no loads induce transients or excessive electrical noise into the branch circuits used. All wiring within the customer-provided installation site should conform to local and national standards. (Refer to Figures 2-1 and 2-2 for schematics diagrams of power distribution systems commonly available at many sites in the USA.)

Branch Circuit Grounding

Customer-supplied, branch circuits should have insulated wire conductors that are identical to the phase-conductor wires. The grounding wires of the customer supplied branch-circuit should be tied to a common ground point at the distribution panel, and a single grounding wire running to a suitable building ground (a non-current carrying line rather than a neutral).

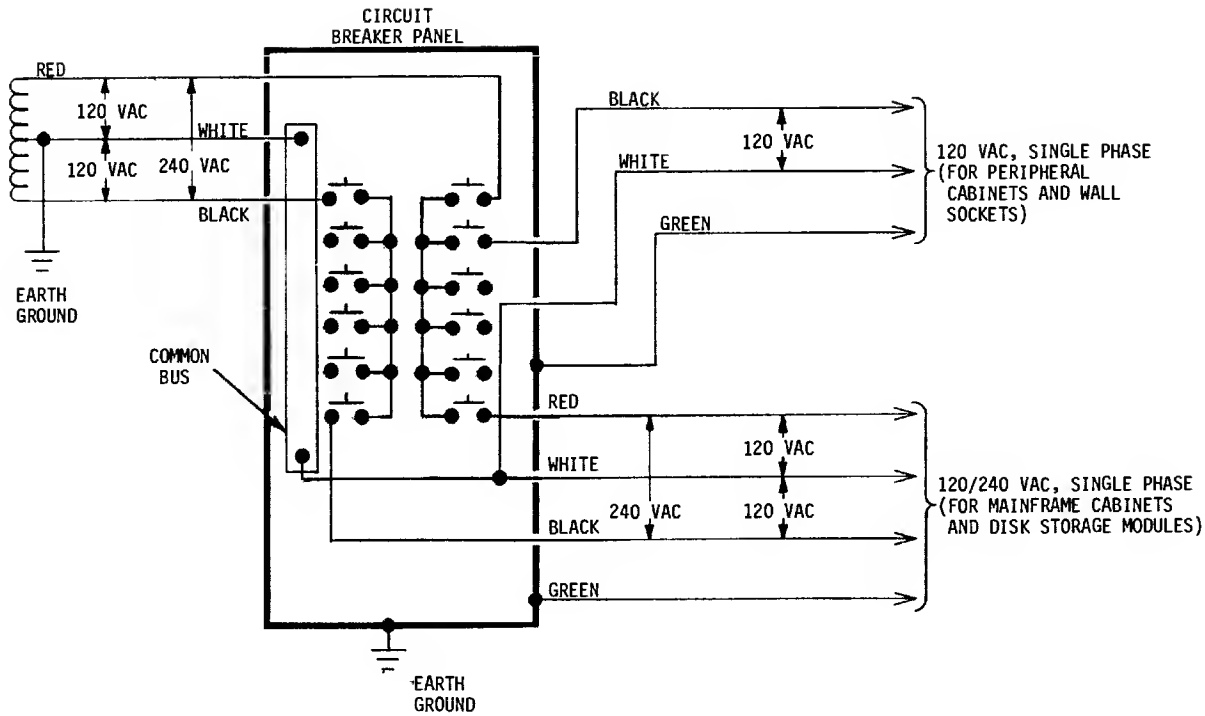

Figure 2-1. Power Distribution System Commonly Available at Many Business Offices (USA)

Equipment Grounding

Prime cabinets and free-standing peripherals are equipped with grounding lugs that can be used to establish electrical contact with earth-grounded floors. Mainframe systems or peripherals installed within cabinets can be daisy-chain connected to the cabinet-grounding lugs.

Standby System

A gasoline or diesel powered generator can be used as a standby power source if power outages are common in the site area.

Emergency System

A static inverter can be used to provide close regulation of AC power inputs and charge storage batteries to supply emergency power to systems and equipment if momentary power interruptions are experienced.

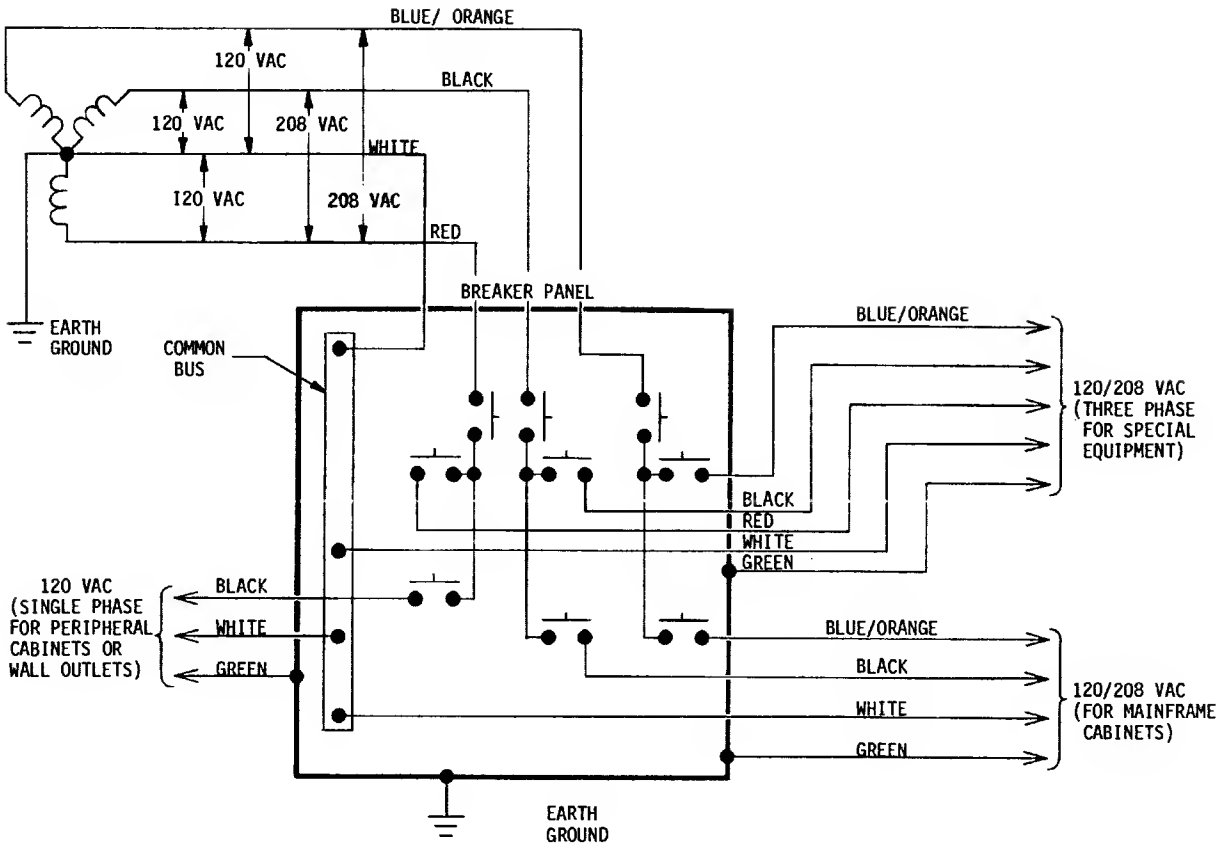

Figure 2-2. Power Distribution System Commonly Available at Large Industrial Complexes (USA)

ENVIRONMENTAL

Computer-Room HVAC Considerations

Heating, ventilation and air-conditioning (HVAC) should be considered as required to meet environmental operating requirements for all products applicable. Prior to approving a partitioned enclosure as a suitable computer-room, the customer should consider heat-leakage and load limitations of walls, ceilings, floors, windows, lighting, computer-room personnel and the heat-generating capabilities of the equipment ordered. (Refer to Appendix A, page A-4 for a table of heat-leakage and loads.)

Environmental Control System

The customer should consider an environmental control system adequate to maintain computer-room inside temperature at 20 to 26C (68 to 78F). Mainframe systems and peripherals can operate within a temperature range of +15 to +32C (30 to 80% relative humidity without condensation). (Refer to Appendix A for specific environmental operating requirements.) System reliability decreases with increases in computer-room temperature.

SCHEDULING

The customer should consider a schedule that ensures completion of site preparation well in advance of equipment delivery. This includes completion of building modifications, installation of environmental control devices and all required elelctrical wiring.

LIAISON

The customer should notify Prime, in advance, of all peculiar requirements which may include:

- Times the site is available for installation of Prime products (after delivered products are in the computer-room in readiness for installation).
- Specific delivery procedures
- Packaging restrictions, i.e. size or weight
- Special security requirements applicable to site (security clearances for installation crew).

DOCUMENTATION

The customer should consider providing space for the storage of applicable documentation in close proximity to the equipment within the computer room. Instructional material such as operation manuals, maintenance manuals, program instruction manuals or logic diagrams and test packages will be supplied with the equipment. A customer can consider one or all of the following items:

- Bookcases for technical manuals
- File cabinets for specifications and related documentation
- Storage cabinets for computer software (magnetic tape, paper tape, disk cartridges of floppy disks)
- Tables and chairs as required.

SAFETY

The customer should consider the safety aspects of the overall computer facility and provide a hazard-free environment in which to perform the installation and related testing. If hazards cannot be minimized in the installation area, the customer should notify Prime as applicable. Prerequisites for a hazard-free computer room include:

Obstructions-Floor

A minimum of physical obstructions on, or near the floor (exposed cabling, unguarded terminal strips, etc).

Obstructions-Walls and Cabinets

A minimum number of physical obstructions on, or near the walls (outside computer-room doors should open out, rather than in; cabinet access doors should not obstruct the flow of foot-traffic within the computer-room when opened.)

Exits

Clearly marked computer-room exits should be adequate to provide an obstruction-free evacuation path for computer-room personnel in the event of a fire or natural disaster.

Shutdown

An electrical shutdown mechanism that is easily operated and accessible to computer-room personnel.

Fire

A suitable number of fire extinguishers in readiness for use and accessible to computer-room personnel.

Placards

Notification adequate to alert computer-room personnel to the presence of electrical hazards associated with equipment operation.

Local Codes and Regulations

Compliance with building and safety codes and regulations pertinent to the site location. (Electrical wiring codes met, fire prevention requirements met, alarm requirements met, etc).

SPECIFIC EXAMPLE

A specific sales order and a computer room of definite physical limitations have been selected, and are exhibited herewith to demonstrate the site planning and preparation process. The sales order (Figure 2-3) lists the products to be installed and the quantities deliverable; the computer room selected has inside dimensions of 20 by 15 by 8 feet and does not include HVAC inlets. A primary power source of 120/240 VAC, 30A, 60Hz, single phase is available on site. The computer-room has a double-door entrance and a single-door exit.

Layout Templates

Refer to Appendix C for layout templates and then select templates that apply to the specific order.

** SALES ORDER S-ØØØØ-ØØØ-ØØ PRINT DATE: Ø8/23/77

SOLD TO: SHIP TO:

CUSTOMER P.O.	ORDER/REL. DATE	INTERNAL CODE	SALES ORDER NO
NA	Ø8/22/77	ØØØØ	S-ØØØØ-ØØØ-ØØ

SHIP VIA	INSURANCE	SHIP. ACCEPTED	EST. SHIP. DATE	PRIME CODE A
BW	N	C	Ø8/25/77	NA

SOURCE INSP	CONFIRM CODE	FOB	FREIGHT	ACTUAL SHIP DATE	PRIME CODE B
N	ØØ	FRAM.	NA	/ /	

TAXABLE	APPL. CODE	DOCUMENTATION	PRIME SOFT. PKG.	WAYBILL NO.
N		N	N	

ITM	TYPE-NUMBER	QTY. ORD.	BACK ORD.	DESCRIPTION	UNIT LIST	QTY SHIP	TOTAL AMOUNT
1.	C4-256E-17	1		P400 CPU WITH 256K BYTE INTERLEAVED ERROR CORRECTING (ECC) MOS MEMORY (1 MODULE) IN 17 BD CHASSIS, 2K BYTE CACHE, FLOATING POINT,POWER SUPPLY,CONTROL PANEL,TYPE 3006 SYSTEM OPTION CONTROLLER (SOC), CABINET AND CONSOLE (TERMINET 30). HAS CAPACITY FOR 7 ADDITIONAL MEMORY MODULES.			
2.	4056	1		9TRK,800/1600 BPI,45IPS MT MUST ALSO ORDER 4052,4053 OR 4054			
3.	4261	2		DCU & 1: 80 MB MHD&DISK PC			
4.	3135	1		URC WITH 200LPM/64 CHAR			

Figure 2-3. Sales Order Equipment List

Floor Plan

Select a rectangular-grid, graph paper that can be scaled to ½ an inch equals one foot, and then use it as a matrix layout. Next, sketch a two-dimensional plan view of the selected computer-room and superimpose the layout templates on the matrix layout as shown in Figure 2-4. Selected templates include:

- Product C4-256E-17, a QTY of one template.
- Product 4056, a QTY of one template.
- Product 4261, a QTY of two templates.
- Product 3135, a QTY of one template.
- Product 3111, a QTY of one template.

Product 3111, the system console (Terminet #30), was ordered under the mainframe system's product number (C4-256E-17).

Evaluation of Floor Plan

The floor plan shown in Figure 2-4 is suitable for the specific order. It allows 36 inches of clearance between computer-room walls and rear doors, and 52 inches of clearance between respective front panels of cabinets and peripherals. Layout templates for the cabinets and system console are placed at abutting locations on the layout as recommended by Prime.

Ceiling Clearance

Consult the Equipment Specification Tables (Appendix A) for height dimensions that apply to the products ordered. The greatest overall height dimension is 5.2 feet (62 inches) specified for cabinets. Considering that the computer-room has an inside vertical dimension of eight feet; this leaves 2.8 feet of clearance between the ceiling and the tops of cabinet (a clearance within tolerance):

Greatest Overall Height Dimension Applicable	5.2 Feet	(Cabinets)
Height Clearance Requirement	3.0 Feet	(Cabinet-top to ceiling)
Total	8.2 Feet	(Within 10% Tolerance)

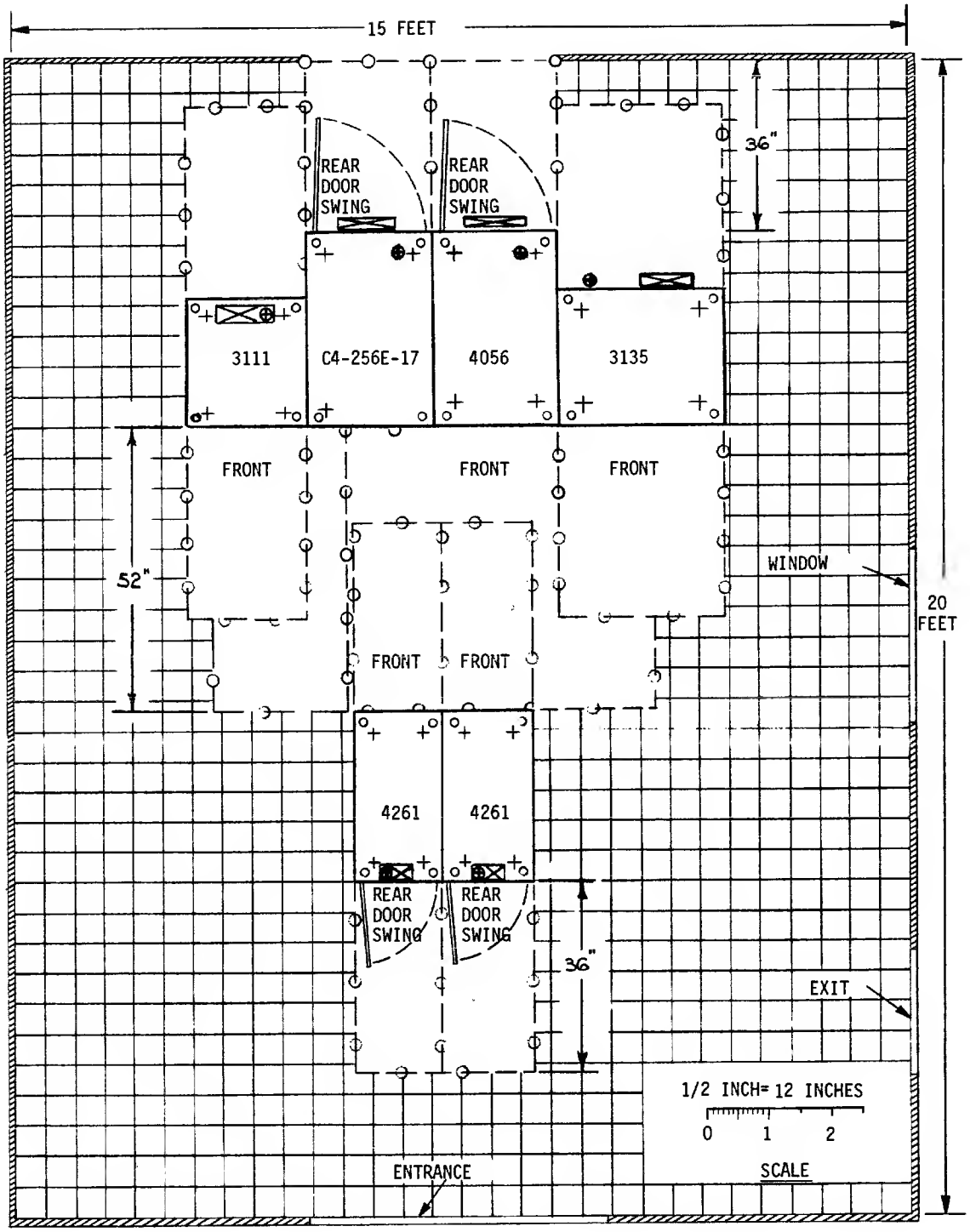

Figure 2-4. Floor Plan for Suitable Computer Room

Weight Considerations

Calculate the total weight of the hardware units ordered (Refer to Appendix A for individual weights of the units):

Mainframe Cabinet (C4-256E-17)	375 lbs
Peripheral Cabinet (4056)	235 lbs
Moving Head Disk Drive (4261, unit #1)	243 lbs
Moving Head Disk Drive (4261, unit #2)	243 lbs
Terminet #30 (3111)	98 lbs
Line Printer (3135)	150 lbs
Total	1344 lbs

The structural floor of the computer-room must be capable of supporting the total weight of the products ordered in addition to all other equipment and people.

AC Outlets

Refer to the Electrician's Worksheet (Appendix A, Figure A-1) for AC-outlet requirements applicable to the products ordered. (Figure 2-5 is offered as a sample of a worksheet prepared specifically for the products ordered.) The following outlets are required:

- Hubbell #2713 Twistlock Receptacle, QTY of 1.
- Hubbell #2613 Twistlock Receptacle, QTY of 1.
- Standard, American Style AC Wall Socket, QTY of 5.

Computer-Room Wiring

Refer to Figure 2-1 for a schematic diagram of the power distribution system available at the selected site. Make a copy of Figure 2-1 for the electrician responsible, and instruct him as appropriate to permit him to wire the computer room. A fanout to the following devices is required:

- Mainframe Cabinet PDU (30A, 120/240 VAC)
- Peripheral Cabinet PDU (30A, 120 VAC)
- System Console (Terminet #30) (15A, 120 VAC)
- Line Printer (15A, 120 VAC)
- 80-Megabyte Disk-Storage Module (15A, 120 VAC)

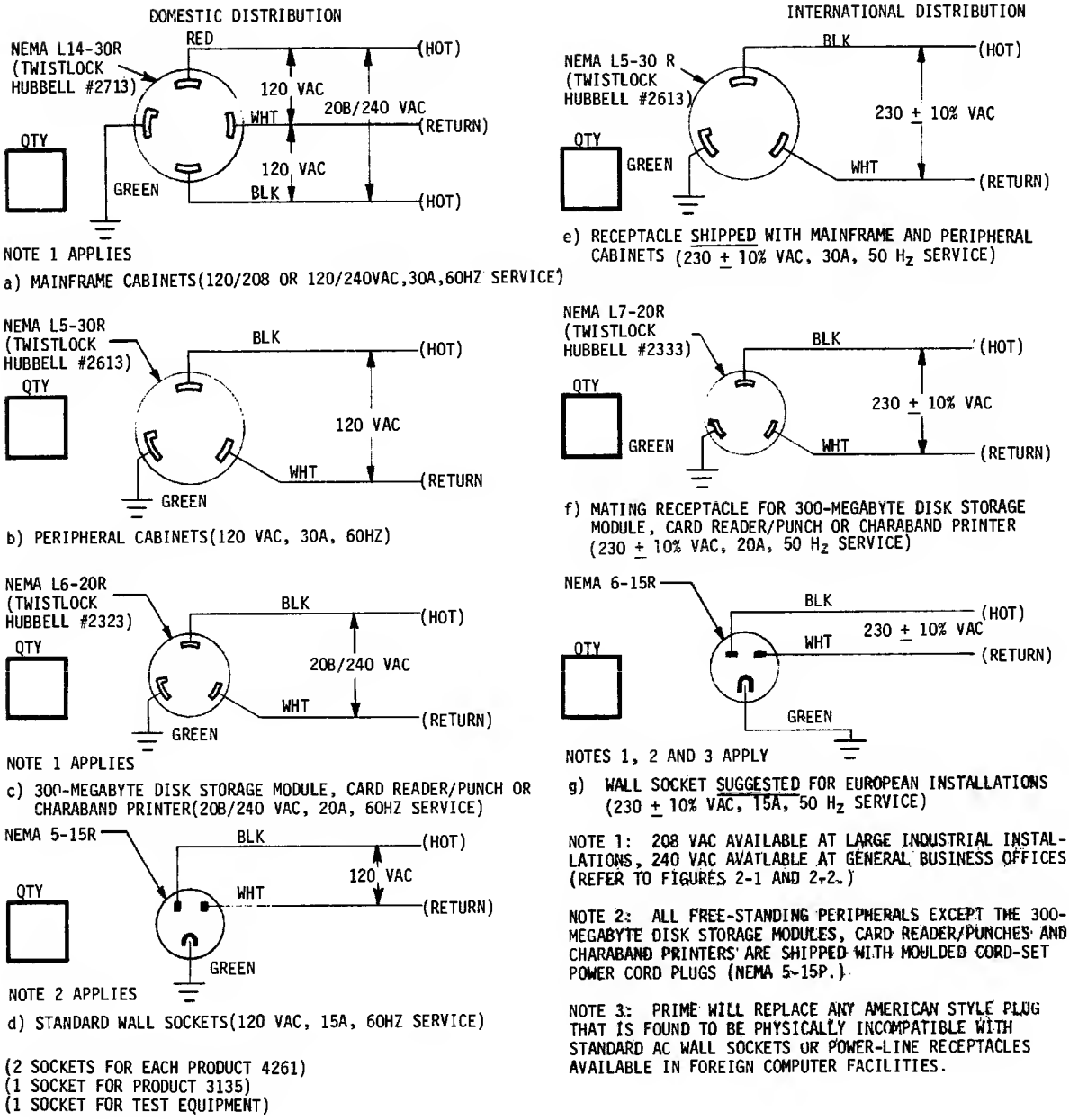

Figure 2-5. Electrician's Worksheet for Specific Example

- 80-Megabyte Disk-Storage Module (15A, 120 VAC)
- Terminal Strip for Test Equipment (15A, 120 VAC)

Environmental Operating Requirements

The available room is located within an air-conditioned, heated and properly ventilated building; therefore, heat leakage into the room through interior walls (doors and windows) is negligible. However; the heat-generating capabilities of the hardware units ordered, computer-room lights and computer-room personnel will have to be considered:

Mainframe Cabinet (C4-256E-17)	7094 BTU/hr
Peripheral Cabinet (4056)	1900 BTU/hr
Moving Head Disk Drive (4261, unit #1)	2390 BTU/hr
Moving Head Disk Drive (4261, unit #2)	2390 BTU/hr
Terminet (3111)	604 BTU/hr
Line Printer (3135)	2730 BTU/hr
Six Fixtures of 4 Fluorescent Lamps (960 watts consumption)	3276 BTU/hr
Five Persons (Worst Case)	2500 BTU/hr
Totals	22,884 BTU/hr

For the recommended total cooling load factor (130 percent of total calculated BTU/hr, Appendix A, page A-4), select a 30K-BTU rated air-conditioning unit for the available room.

Conclusion

The specific order requires 300 square feet of floor space, eight feet of ceiling clearance, a structural floor capable of supporting the 1344 lbs of equipment, a branch-distribution box capable of driving the electrical devices ordered and a 30K-BTU rated air-conditioning unit. A raised floor is recommended by Prime although not required. The data used to prepare the floor plan and make weight and BTU calculation was extracted from Appendices A and C. Refer to Figure 2-6 for an illustration of a computer-room suitable for this specific order, and in a state of readiness for delivery of applicable products and subsequent installation.

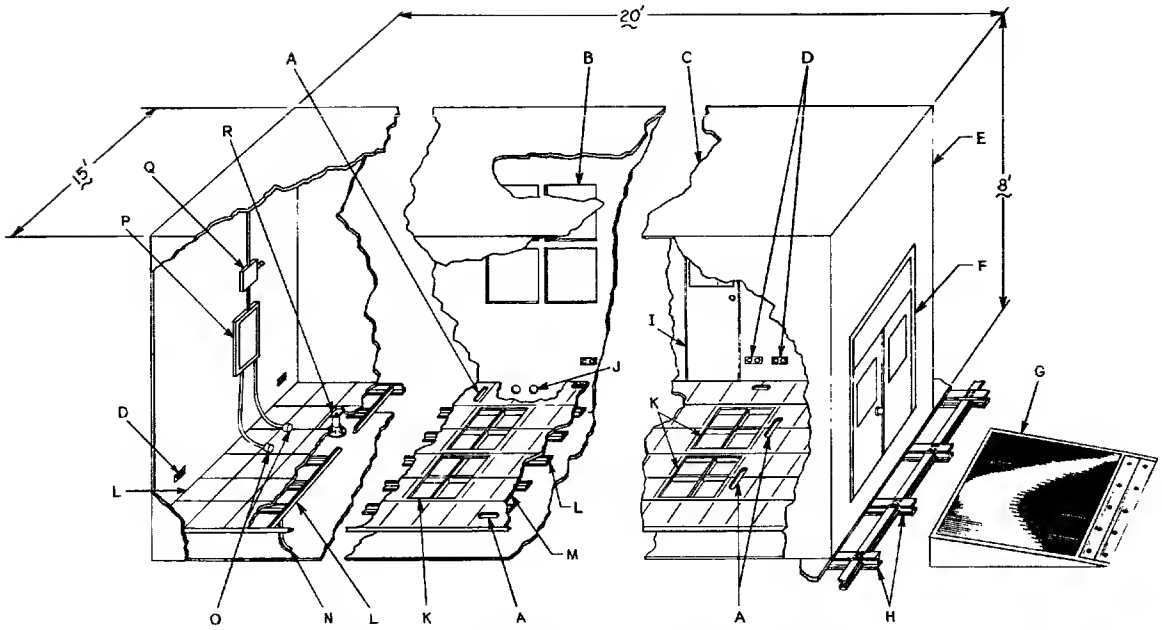

Figure 2-6. The Completed Computer Room

A - Cutouts for Cables

B - Window Panes

C - Ceiling

D - Typical AC Wall Sockets

E - Exterior Wall

F - Entrance Doors

G - Access Ramps

H - Structural Floor and Framework

I - Exit Door

J - HVAC Ducts to 30K Air Conditioner

K - Cutouts for Power Cords & Ventilation

L - Raised-Floor Framework

M - Removable Floor Section

N - Grounding Strap

O - AC Power Lines

P - Branch Distribution Box

Q - Master Switch

R - Typical Support for Raised Floor

NOTES:

(1) AC POWER LINES ARE PROVIDED WITH HUBBELL TYPE 2713 TWISTLOCK CONNECTORS FOR MAINFAME CABINETS AND WITH HUBBELL TYPE 2613 TWISTLOCK CONNECTORS FOR PERIPHERAL CABINETS.

(2) RAISED-FLOORS ARE RECOMMENDED TO PROVIDE PROTECTION FOR CABLES AND POWER CORDS, AND PERMIT EFFICIENT VENTILATION FOR CABINET-MOUNTED SYSTEMS AND PERIPHERALS.

(3) AC WALL SOCKETS ARE PROVIDED FOR FREE-STANDING PERIPHERALS AND TEST EQUIPMENT.

(4) HVAC DUCTS (INDEX J) ARE RECOMMENDED, BUT NOT REQUIRED.

SECTION 3

PRE-INSTALLATION ACTIVITIES

RESPONSIBILITIES

Three parties share pre-installation responsibilities: Prime, the customer and the mover (van-service agency). Prime is responsible for packaging applicable products for shipment and for providing field service as necessary to support pre-installation coordination for those systems that contractually qualify. The customer is responsible for insuring all hardware units shipped, employing a suitable mover, inspecting all hardware units delivered to the designated installation site and notifying Prime of delivery discrepancies or shipping damages. A mover is responsible for the safe transport of the units ordered. The customer must arrange with the mover or other parties to have the hardware units located within the final computer room.

PRE-SHIPMENT

Each hardware unit is quality inspected prior to packaging. The cabinets and free-standing peripherals weighing more than 100 pounds are placed within plastic straps as shown in Figure 3-1. Interface cables or detachable power cords are packaged within corrugated cardboard boxes separately from the cabinets or free-standing peripherals. Free-standing peripherals weighing less than 100 pounds are packaged in accordance with OEM recommendations.

INSPECTION

All equipment should be inspected by the customer upon their delivery. Shipments should be in compliance with the packing list (Figure 3-2) and free of shipping damages. The customer is responsible for inspection of delivered equipment and for notification of the nearest Prime field service office when delivery discrepancies are noted.

UNPACKING

The customer should ensure that precautions are taken to minimize the number of damage claims related to the unpacking of delivered equipment. Personnel assigned to monitor unpacking activities should be watchful of the use of handtools and sufficiently alert to recognize and note damages incurred. When a delivered hardware unit has been unpacked, the monitoring person should inspect it thoroughly for evidence of shipping damage. Damages should be noted and Prime's field service office notified immediately.

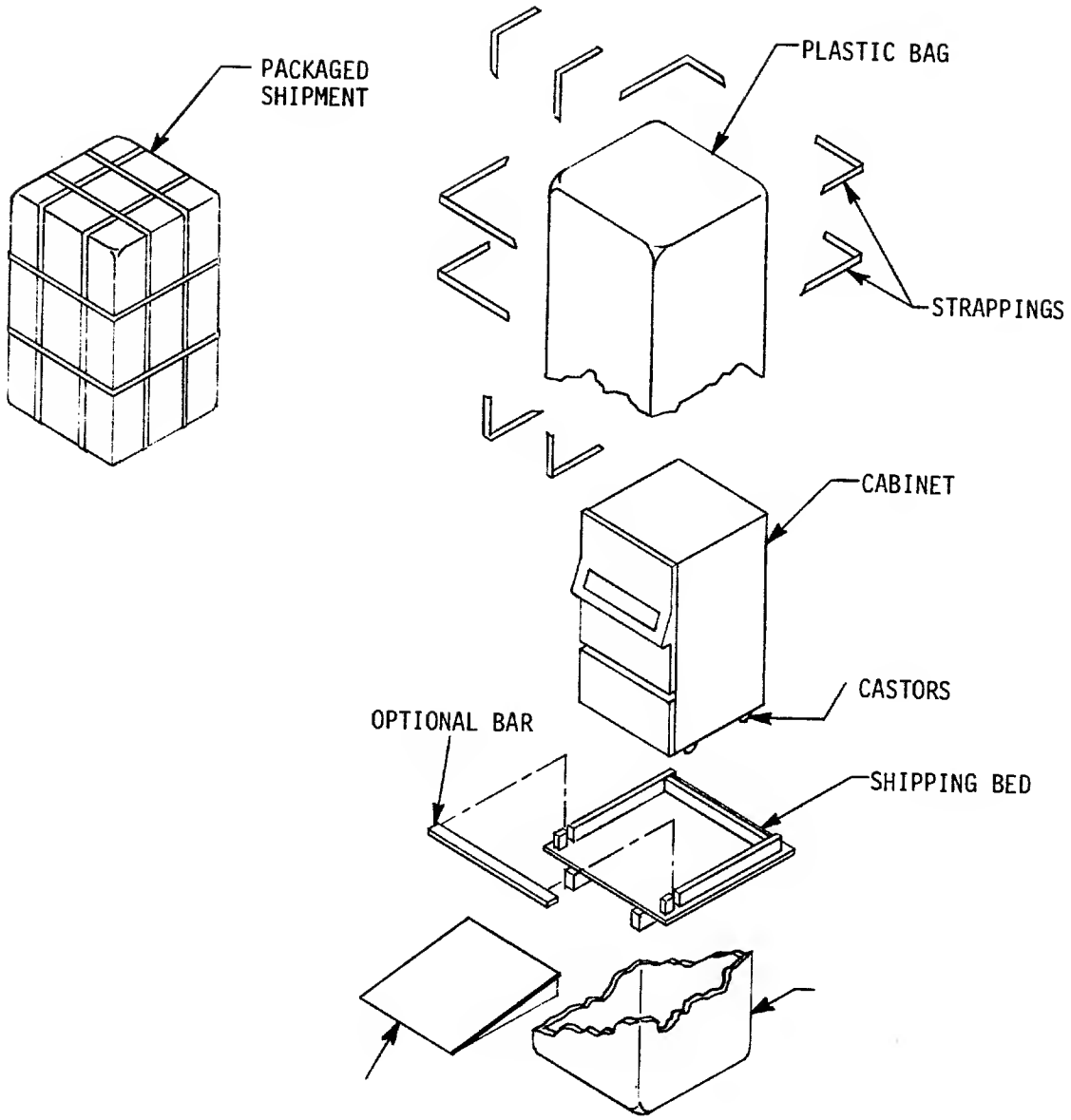

NOTE:

CABINET, SHIPPING BED AND UNLOADING RAMP ARE SHIPPED WITHIN THE PLASTIC BAG.

Figure 3-1. Typical Packaged Shipment and Contents

PRIME
COMPUTER, INC.
145 Pennsylvania Avenue
Framingham, Mass. 01701
(617) 877-2960

No. 9991111

DATE Sept. 5, 1977

SHIPPED TO
XYZ COMPANY
123 Apple Way
Framingham, MA

PRIME INSURED: $
CUSTOMER INSURED: $ 5,000.00
VIA: ☐ AIR ☒ SURFACE
CUSTOMER NO.: 425
S.O. NO.: S1234-001
SHIPPED VIA: B.N.A.F. 123456
☒ PPD. ☐ COLL.

ITEM NO.	QTY. SHIPPED	QTY. ON BACK-ORDER	DESCRIPTION / PART NO.	CARTON NO.
1	1	0	C4-256E-17 System	
2	1	0	4056 Magnetic Tape Transport	
3	2	0	4261 Disk Storage Module	
4	1	0	3111 Terminet #30	
5	1	0	3135 Line Printer	

PACKING LIST

NO. of CARTONS	WEIGHT	PACKED BY
4	1400 lbs	Robert Clark

FORM 133 (477)

ORIGINAL

Figure 3-2. Typical Packing List for Hardware

Materials used in packing and packaging should be retained for reuse if return of damaged units become necessary. To unpack mainframe or peripheral cabinets, observe the following guidelines:

- Cut the plastic bindings free and remove plastic covering material.
- Place unloading ramp (supplied with cabinet) on the computer-room floor as shown in Figure 3-1).
- Free the cabinet by removing the packing bar (if one used).
- Carefully roll the caster-equipped cabinet off the shipping bed and down the ramp onto the computer-room floor.

Note

Exercise care when rolling cabinets down ramps because some cabinets may be top heavy depending on location of peripherals mounted within.

- Open cabinet rear door and inspect interior to verify that the various units of equipment represented by the product's number have been delivered.

Note

Refer to page A-1 of Appendix A (herein) for product-number decoding instructions.

To unpack free-standing peripherals, observe the following guidelines:

- Containers are opened in accordance with instructions printed on external surfaces.
- Packing materials are removed and may be saved for reuse.
- Peripherals and accessory items are removed manually (such hardware units usually weigh less than 100 pounds).
- Peripherals and accessory items are checked for compliance with sales orders.
- If floor stands are provided with peripheral, assembly of stand and mounting of peripheral upon stand (or pedestal) is accomplished in accordance with OEM-manual instructions (provided).

DELIVERED SOFTWARE ITEMS

All software items delivered should be unpacked and filed in the appropriate computer-room library prior to initiation of installation. Such software items may include, but are not limited to, the following:

- General Maintenance Documentation
- General User Documentation

READINESS OF SITE

The following items within the computer-room should be checked for compliance to site specifications.

- AC outlets adequate to power the equipment specified in the sales order.
- Heating, air-conditioning and ventilation equipment as required to provide the specified operating environment in which to operate computer equipment.

CUSTOMER DAMAGE CLAIMS

Prime's field service organization will act as the customer's agent and respond to all customer-damage claims, notify the home office of all claims and replace damaged components as necessary to ensure that equipment is in compliance with operating specifications prior to installation (on-site). A field service representative will perform the following tasks upon notification (by the customer):

- Examine the affected hardware as necessary to determine the degree of damages.
- Effect repairs (on-site) by replacing damaged components or parts.
- Prepare a damage report as required for distribution to interested parties, and submit copies and all related appendages to the Prime's home offices.

SECTION 4

INSTALLATION

RESPONSIBILITIES

Prime is responsible for installation of delivered products in accordance with the terms of the sale, and for performance of all related equipment verification and demonstrations. The customer is responsible to ensure site readiness, locate delivered equipment within the computer-room, schedule the installation and support the installation procedures as required. The connection of cabinets and free-standing peripherals from the lugs provided to earth ground is the customer's responsibility. The computer-room must include a branch distribution circuit that meets the general requirements specified in Section 2. (Refer to Figures 2-1 and 2-2.)

RECOMMENDED INSTALLATION GUIDELINES

The Prime field service representative will perform the installation; the customer will coordinate supporting activities as necessary to support the installation.

Equipment Positioning

Cabinets and free-standing peripherals weighing 100 pounds or more will be equipped with swivel casters for ease of movement; table-top peripherals weighing up to 150 pounds will be placed on OEM-provided floor stands, or customer-provided computer-room tables. Clearance distances between cabinets and obstructions should be as specified in the customer supplied layout plan, and conform to site specifications.

Equipment Leveling

Cabinets, free-standing peripherals and OEM recommended mounting stands are equipped with adjustable leveling pads as shown in Figure 4-1. The leveling pads are screwed down by the use of hand tools until the unit is horizontally level. Additional readings of the level are taken with the level placed in respective vertical positions and the pads adjusted accordingly as necessary to level the unit.

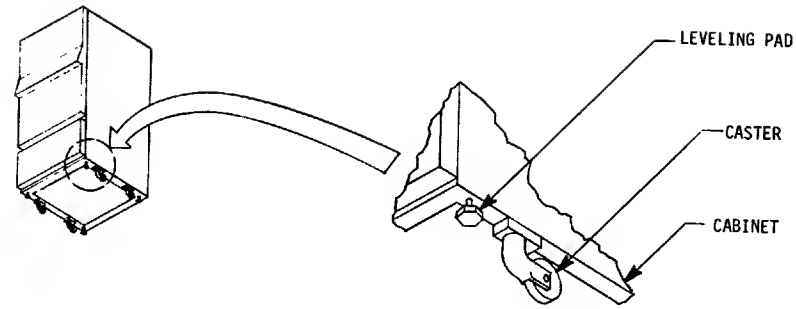

A. Typical Cabinet Leveling Pad

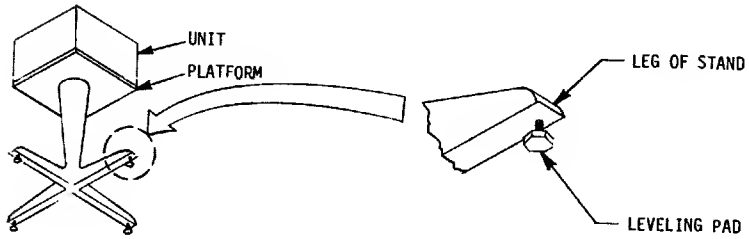

B. Typical Free-Standing Unit and Mounting Stand

Figure 4-1. Adjustable Leveling Pads

Grounded AC Power System

Ground-fault detectors should be used to verify the adequacy of the site's primary power ground. The appropriate fault-detecting device (Prime supplied) is plugged into respective site receptacles and its fault-lamp remains extinguished for adequate grounds or illuminates steady for inadequate grounds.

System Grounding

Every effort should be made to minimize the number of electrical hazards that can exist within a computer-room. Free-standing peripherals and cabinets should be equipped with wire-braid grounding straps that can be used to establish electrical contact with earth ground.

Raised Floor: If a raised grid floor is available on site, use it as a conductor to connect free-standing peripherals, cabinets and earth-grounded floors as shown in Figure 4-2.A.

Structural Floor: If no raised floor is used, daisy-chain the free-standing peripherals and peripheral cabinets with the mainframe cabinet as shown in Figure 4-2.B; and then ground the mainframe cabinet.

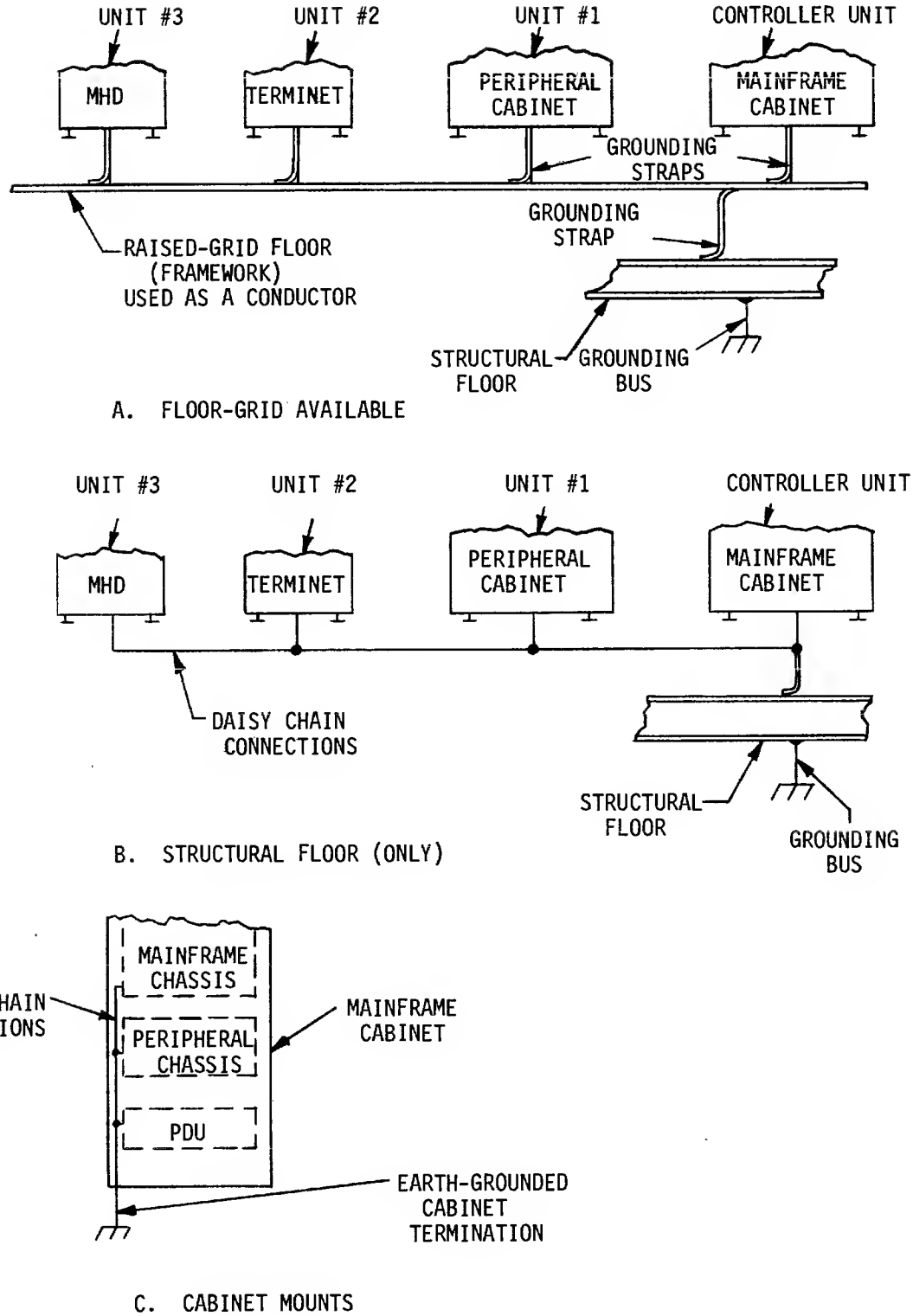

Figure 4-2. Equipment Grounding Diagram

Cabinet-Mounted Equipment: Chassis of mainframe systems and peripherals mounted within cabinets can be daisy chained chassis-to-chassis to earth grounded cabinets as shown in Figure 4-2.C. Earth ground at the site may be available at the main-power distribution panel (if it is connected to building ground), at the steel plate in contact with the masonry below the panel (if the panel is not connected to earth ground) or to an earth-ground bus. Connect one end of the wire-braid grounding strap to the available ground.

Site Compatibility

The AC power-line receptacles and wall sockets found in the computer room must be compatible to mate with the connector plugs provided with the delivered equipment. Refer to Figure A-1, Appendix A for site-receptacle requirements, and to Table 4-1 for a complete listing of site-requirements versus power cords, plugs and equipment connectors provided. Verify that all power cords and plugs provided with delivered equipment are physically compatible to mate with the respective receptacles listed in Table 4-1.

Cables

Peripheral devices must be interconnected with mainframe systems. Verify that the required interconnection cables have been delivered. (Refer to Appendix B for a listing of cable-identification numbers available to particular products.) A typical interconnection cable is shown in Figure 4-3.

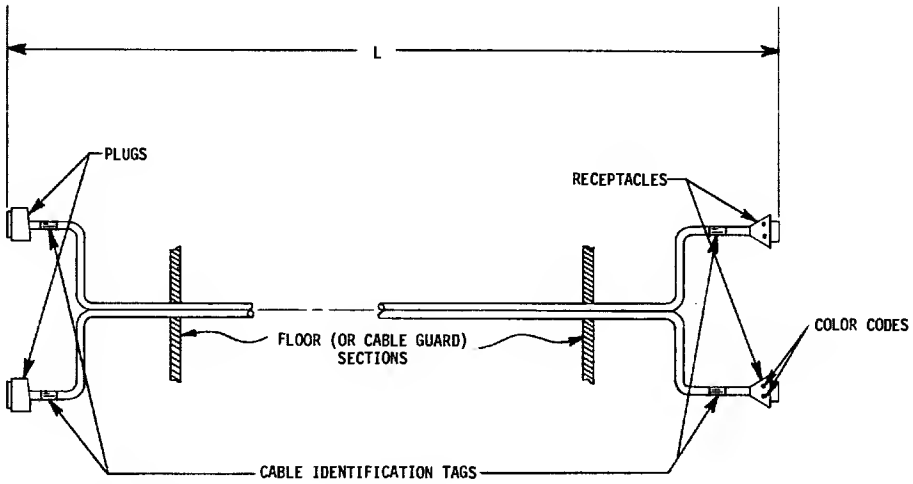

NOTES:

(1) RECEPTACLES MATE WITH PRINTED CIRCUIT BOARD, EDGE CONNECTORS AS COLOR CODED.

(2) PLUGS MATE WITH PERIPHERAL RECEPTACLES.

(3) CABLE OVERALL LENGTH (L) IS SPECIFIED IN SALES ORDER.

Figure 4-3. A Typical Interconnection Cable

Table 4-1. Power Cords and Connectors

PRODUCT CATEGORY	SITE REQUIREMENTS			POWER CORDS PROVIDED			CONNECTORS & CORDS
	SERVICE	AC OUTLET	NEMA REFERENCE	LENGTH	CONDUCTORS	NEMA REFERENCES	
Mainframe Cabinet (Distributed USA)	120/240 VAC or 120/208 VAC	HUBBELL #2713 Twistlock	L14-30R	9.0 ft.	4	L14-30 (P & R)	HUBBELL #2713 and #2711 Twistlocks provided with detachable power cords.
Peripheral Cabinet (Distributed USA)	120 VAC	HUBBELL #2613 Twistlock	L5-30R	9.0 ft.	3	L5-30 (P & R)	HUBBELL #2613 and #2611 Twistlocks provided with detachable power cords.
Mainframe & Peripheral Cabinets (Distributed Internationally)	230 VAC	A/A	A/A	N/P	N/P	N/P	HUBBELL #2613 Twistlock provided with detachable power cords.
Standard Free-Standing Peripherals (Distributed USA)	120 VAC	American Style AC-Wall Socket	5-15R	6 to 10 ft.	3	5-15 (P & R)	American style three-wire plug or plugs and receptacles with detachables
Peculiar(*) Free-Standing Peripherals (Distributed USA)	208 VAC	HUBBELL #2323 Twistlock	L6-20R	9 to 10 ft.	3	L6-20 (P & R)	HUBBELL #2321 and #2323 Twistlocks with detachables, HUBBELL #2321 with non-detachables.
Standard Free-Standing Peripherals (Distributed Internationally)	230 VAC	European Style AC-Wall Socket As applicable (S)	6-15R (S)	1.8 to 3.0m	3	5-15 (P & R)	American style Three-wire plugs, or plugs and receptacles with detachables.
Peculiar (*) Free-Standing Peripherals (Distributed Internationally)	230 VAC	HUBBELL #2333 Twistlock (S)	L7-20R (S)	2.7 to 3.0m	3	L7-20 (P & R)	HUBBELL #2331 and #2333 Twistlocks with detachables, HUBBELL #2331 with non-detachables

LEGEND

A/A - Any Applicable
N/P - None Provided
(S) - Suggested
(*) - 300-megabyte Disk Storage Modules Card Reader/Punches and Charaband Printers

(P & R) - Plug or Receptacle (as applicable)
DETACHABLE (S) - Power cords that can be removed from stand-alone equipment

Shipping Restraints

Peripheral devices are often shipped with internal shipping restraints in place, i.e., disk drives. Verify that all internal shipping restraints (heads tied back on moving head disk drives) have been removed before proceeding with the installation procedures.

CAUTION

Failure to remove shipping restraints can result in damage to equipment if power is applied indiscriminately.

Layout of Cables

Interconnection cables should now be prepared for installation as shown in Figure 4-4.

- Uncoil each applicable cable completely, and then lay out on the computer-room floor between the free-standing peripheral and the mainframe cabinet.
- Examine each stretched-out cable for overall length and suitability.

Each cable should be equipped with at least one plug, and one or more color-coded receptacles.

- Ensure that the plug-ends of each stretched-out cable are located in proximity to respective mating connectors on peripherals.
- Ensure that the receptacle-ends of each stretched-out cable are located in proximity to respective mating connectors within the mainframe system.
- Harness the cables together as appropriate.
- If a raised floor is available in the computer room, install the harnessed cables beneath it as appropriate.
- Assure theat cables installed beneath the raised floor are of sufficient length to reach respective mating connections on peripherals and within mainframe chassis. (Refer to Figure 4-4.)

Note

Plug-ends of cables connect with peripherals; receptacle-ends of cables connect with color-coded counter parts in the mainframe chassis.

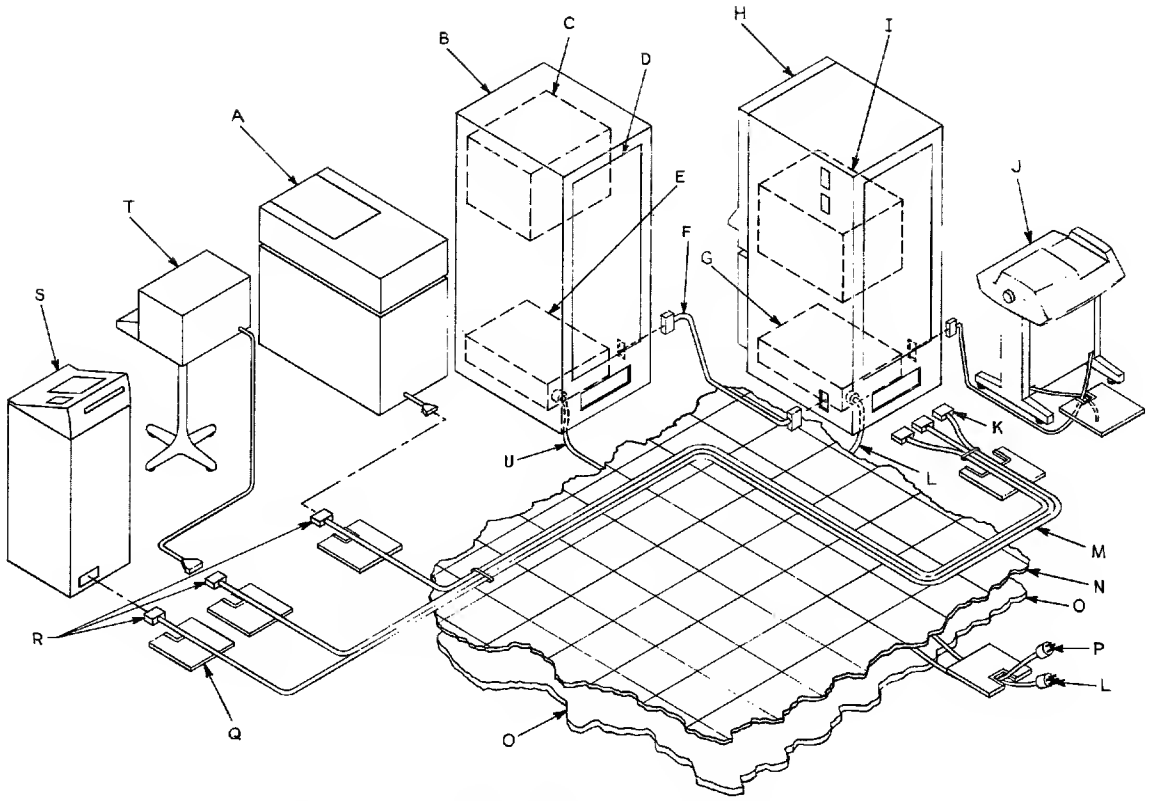

Figure 4-4. Layout of Cables and Equipment

A - Disk Storage Module
B - Peripheral Cabinet
C - Magnetic Tape Transport
D - Cabinet's Rear Door
E - Peripheral Cabinet's PDU
F - Interconnection Cable for Tape Transport
G - Mainframe Cabinet's PDU
H - Mainframe Cabinet
I - Mainframe Chassis
J - Terminet #30
K - Receptacle-Ends of Interconnection Cables
L - Power Cord and Four-Wire Twistlock Plug for Mainframe Cabinet
M - Harnessed Cables-Layed-Out
N - Raised Floor
O - Structural Floor
P - Three-Wire Twistlock Plug
Q - Floor-Section with Cutout
R - Plug-end of Cables
S - Printer/Plotter
T - User Terminal
U - Power Cord for Peripheral Cabinet

NOTE:

Mainframe and peripheral cabinets normally installed at abutting locations.

Cable Connections-Mainframe Cabinet Only

The rear door of the mainframe cabinet is opened and the printed-circuit boards within are examined for color-coded, edge connectors:

- If the color codes of the edge-connector on mainframe printed circuits correspond to color codes observed on the receptacle-ends of the harnessed cables, remove the cable-access plate on the mainframe cabinet.

The access plate on the bottom rear of the mainframe cabinet is for cables only; power cords connect from underneath the cabinet as shown in Figure 4-4.

- Place the receptacle-connector ends of each harnessed cable within the mainframe-cabinet interior (through the cable access opening, rear bottom).

- Mate the receptacle-connector ends of cables with respective color-coded edge connectors on the printed-circuit boards as shown in Figure 4-5.

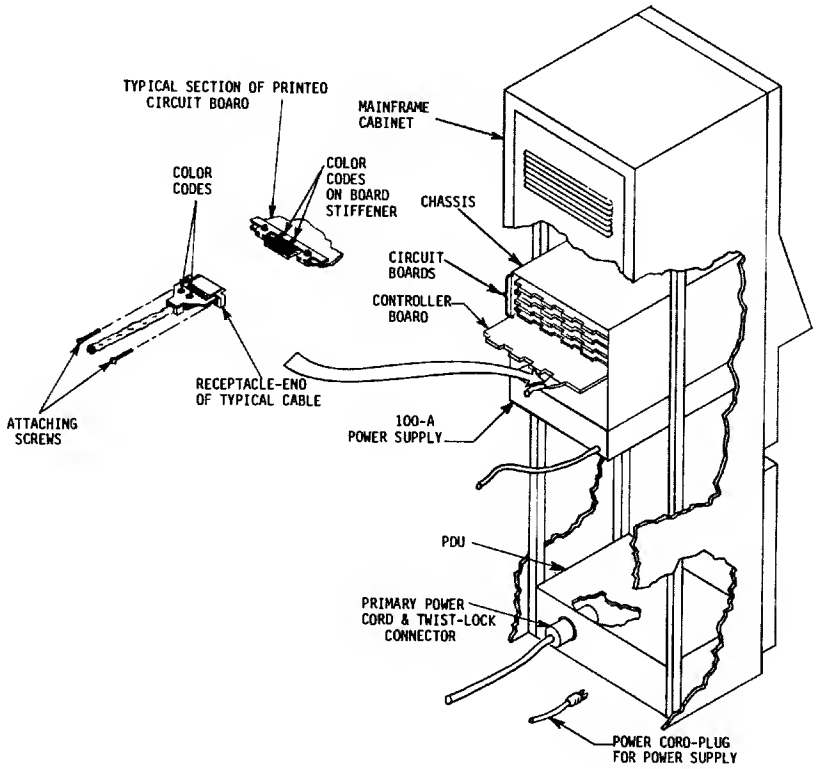

Figure 4-5. Cable Connections at Mainframe System

- Ensure that color codes on the respective mated connectors coincide and are visible (red mated with red, green/white mated with green/white, etc.).

- Using hand tools, tighten the connector screws on each mated receptacle within the mainframe cabinet.

PDU Interconnections

The mainframe cabinet's control panel includes a keylock switch which can be used to apply power to all SWITCHED AC duplex receptacles on PDU's within a multi-cabinet configuration.

Note

SWITCHED AC duplex receptacles on PDU's (Figures 4-6 and 4-7) are normally reserved for use with central-system power supplies; UNSWITCHED duplex receptacles are normally reserved for use with peripheral (cabinet-mounted or mountable) power supplies.

In a multi-cabinet configuration, respective PDU's and mainframe control panels are daisy-chain connected via Matenlock connectors J2, J3 and J4 as shown in Figure 4-8.

Verify the J2-connection first:

- Examine the interior of the mainframe cabinet for an orange-colored, two-wire line with a plastic plug.

Note

The orange-colored, two-wire line is connected permanently to the control panel and can be plugged into receptacle J2 of the mainframe PDU (Figure 4-6).

- Ensure that the orange-colored, two-wire line is plugged into receptacle J2 on the mainframe PDU.

- Examine the interior of the first peripheral cabinet (in the system) for an orange/white colored, two-wire line with plastic plugs at opposite ends.

Verify the J3- and J4- connections next:

- Verify that one plug-end of the orange/white line is plugged into receptacle J4 on the first peripheral cabinet's PDU (Figures 4-7 and 4-8).

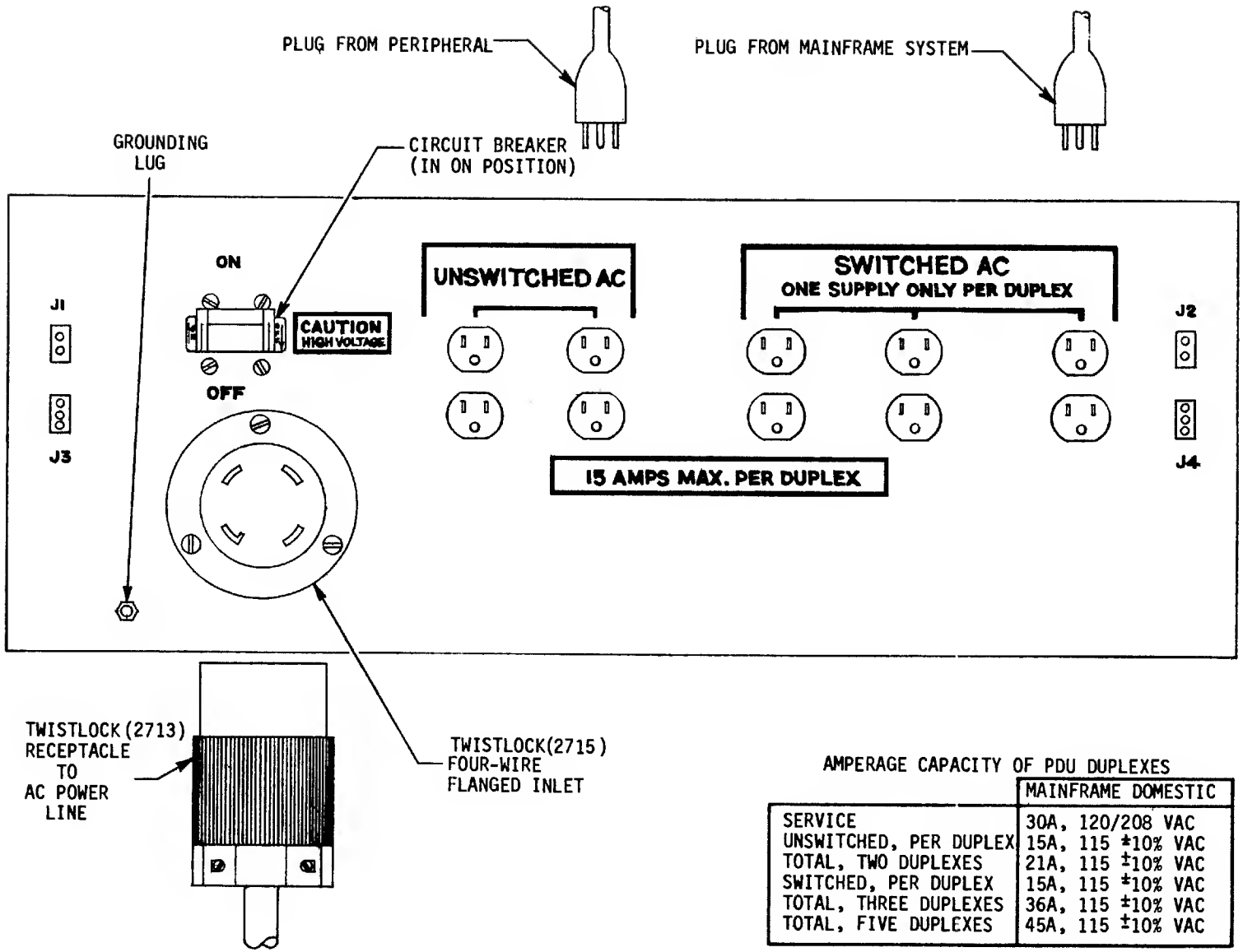

AMPERAGE CAPACITY OF PDU DUPLEXES

	MAINFRAME DOMESTIC
SERVICE	30A, 120/208 VAC
UNSWITCHED, PER DUPLEX	15A, 115 ±10% VAC
TOTAL, TWO DUPLEXES	21A, 115 ±10% VAC
SWITCHED, PER DUPLEX	15A, 115 ±10% VAC
TOTAL, THREE DUPLEXES	36A, 115 ±10% VAC
TOTAL, FIVE DUPLEXES	45A, 115 ±10% VAC

Figure 4-6. Domestic Mainframe Cabinet PDU

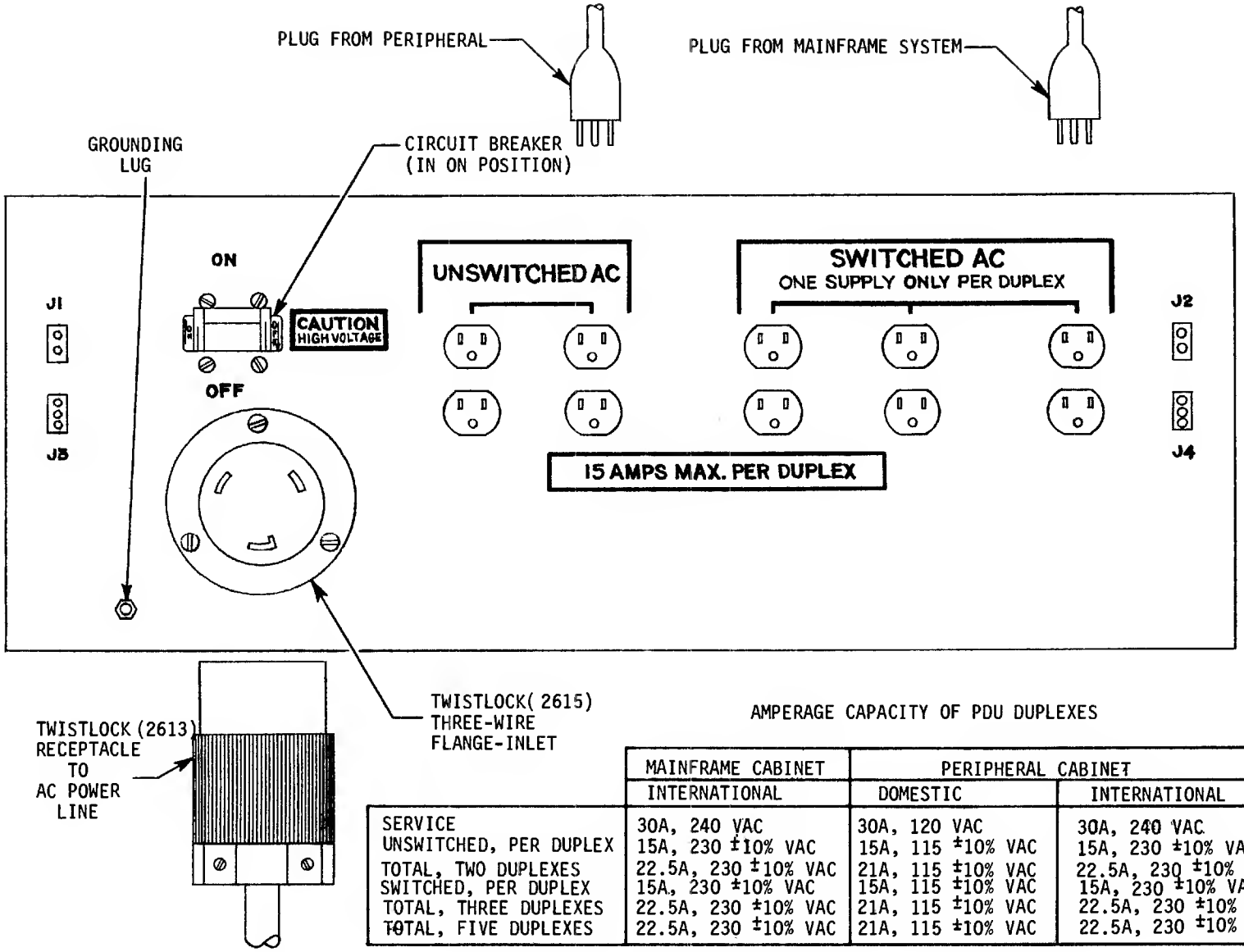

AMPERAGE CAPACITY OF PDU DUPLEXES

	MAINFRAME CABINET	PERIPHERAL CABINET	
	INTERNATIONAL	DOMESTIC	INTERNATIONAL
SERVICE	30A, 240 VAC	30A, 120 VAC	30A, 240 VAC
UNSWITCHED, PER DUPLEX	15A, 230 ±10% VAC	15A, 115 ±10% VAC	15A, 230 ±10% VAC
TOTAL, TWO DUPLEXES	22.5A, 230 ±10% VAC	21A, 115 ±10% VAC	22.5A, 230 ±10% VAC
SWITCHED, PER DUPLEX	15A, 230 ±10% VAC	15A, 115 ±10% VAC	15A, 230 ±10% VAC
TOTAL, THREE DUPLEXES	22.5A, 230 ±10% VAC	21A, 115 ±10% VAC	22.5A, 230 ±10% VAC
TOTAL, FIVE DUPLEXES	22.5A, 230 ±10% VAC	21A, 115 ±10% VAC	22.5A, 230 ±10% VAC

Figure 4-7. PDU for International Mainframe and all Peripheral Cabinets

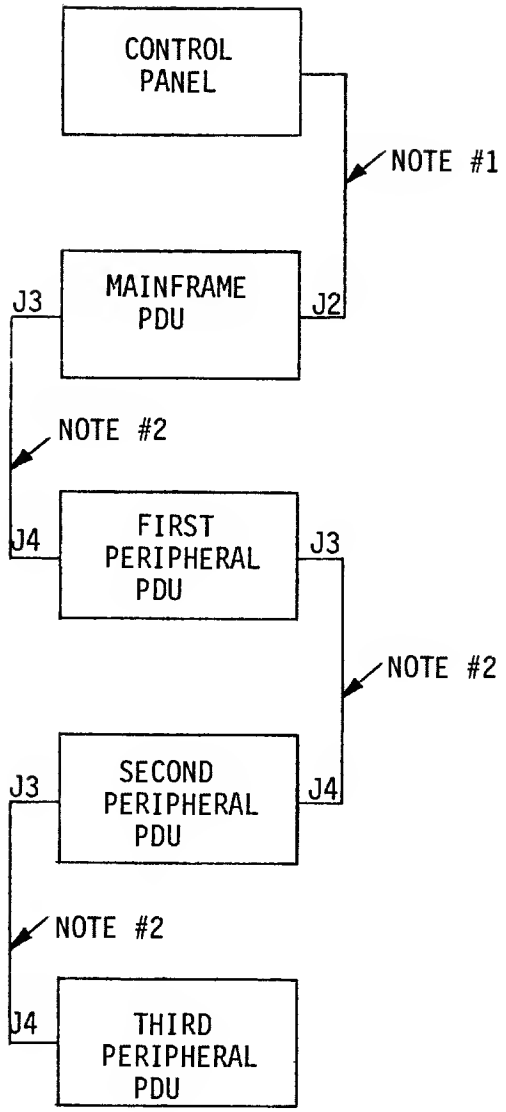

NOTES:

(1) ORANGE-COLORED, TWO-WIRE LINE.

(2) ORANGE/WHITE COLORED, TWO-WIRE LINE.

Figure 4-8. PDU - Control Panel Interconnections

Note

The orange/white, two-wire line is normally installed in peripheral cabinets at the factory, and plugged into PDU receptacle J4 for shipment.

- Feed the other plug-end of the orange/white line through the cabinet-interconnection access cutouts (Figure 4-4), and then plug into receptacle J3 on the mainframe cabinet's PDU.

Receptacle J4 is located on the right side of the peripheral cabinet's PDU; receptacle J3 is located on the left side of the mainframe cabinet's PDU, respective cabinets have cable-access cutouts that permit cabinet-to-cabinet interconnections.

- If additional peripheral cabinets are being installed daisy chain their respective PDU's as shown in the Figure 4-8.

Cable Connections - Peripheral Cabinets

Peripherals mounted in Prime cabinets can be interconnected with mainframe controller boards via access cutouts and cables as shown in Figure 4-4 (Index F). This category of peripheral includes tape transports, cartridge disk drives, diskette drives and paper tape reader/punches.

- Reference Appendix B for cable numbers applicable.
- Identify cables by verifying cable number on respective cable tags (Figure 4-3).
- Select plug-ends of applicable cables and plug into mating receptacle connectors on cabinet-enclosed peripherals.
- Ensure that respective cables are mated with respective peripherals. (Verify by identification-number tags.)

- Feed receptacle-connector ends of peripheral-connected cables through the cabinet-interconnection access cutouts into the interior of mainframe cabinet. Either side- or front-access cutouts can be used; front cutouts are recommended when cables are excessively long.

- Mate color-coded receptacle connectors of peripheral-connected cables with color-coded counterparts on mainframe printed-circuit boards, and then tighten connector screws.

Cable Connections-Free Standing Peripherals

The cables harnessed and connected to mainframe printed-circuit boards previously can now be connected at peripherals, (See Layout of Cables and Cable Connections - Mainframe Cabinet Only). For each free-standing peripheral in the computer-room, observe the following instructions:

- Identify that its interconnection cable's plug is free of the harness and in readiness to be connected. Each cable has an identification tag as described previously.

- Insert plug-ends of identified cables into mating connectors on respective peripherals and secure as required.

Power Connections-Mainframe Cabinets (USA)

When all interconnection cables have been installed, verify that central systems or peripherals are connected to the AC receptacles on the mainframe PDU's. SWITCHED duplex outlets are normally reserved for use with central-system power supplies; UNSWITCHED duplex outlets are normally reserved for use with peripheral power supplies that may be mounted in the mainframe cabinet. SWITCHED outlets can be activated from the PDU circuit breaker, and from the control-panel keylock switch (when the circuit breaker is engaged). UNSWITCHED outlets can be activated from the PDU circuit breaker (only). (Refer to Figure 4-6 for an illustration of a mainframe PDU's five AC duplex receptacles.) When all cabinet internal power connections have been verified, connect the mainframe PDU with the primary power source:

- Run the power cords (Table 4-1) between the cabinet's PDU and the AC power line's receptacle.

- Ensure that the PDU's circuit breaker is set in the OFF position.

- Connect the PDU's four-wire inlet with the power cord's receptacle as appropriate.

- Connect the power cord's plug with the AC power-line receptacle as appropriate.

Power Connections - Peripheral Cabinets (USA)

The instructions above also apply to the domestic peripheral cabinet with the following exceptions:

- UNSWITCHED AC duplex receptacles are normally used.
- PDU uses a three-wire inlet as shown in Figure 4-7.
- Site AC power line's receptacle mates with a three-wire plug as specified in Table 4-1.

Power Connections - Mainframe and Peripheral Cabinets (International)

The instructions given for domestic mainframe cabinets also apply to international mainframe and peripheral cabinets except:

- PDU equipped with a three-wire inlet.
- No power cord provided.
- Twistlock 2613 receptacle provided only.

Power Connections - Free-Standing Peripherals (Domestic and International)

Free-standing peripherals are connected in accordance with Table 4-1.

Pre-Startup Checkout

Before attempting an initial startup of the system equipment, perform the following checkouts:

- Verify that all color codes painted on cable receptacles match those color codes painted on printed-circuit edge connectors.
- Verify that power cords enclosed within mainframe or peripheral cabinets are plugged into appropriate AC outlets on PDU's in accordance with figures 4-6 and 4-7.
- Verify that cabinet power cords are hooked up with PDU and appropriate AC power lines in accordance with Table 4-1.
- Verify that all electrical connections within cabinets have been secured (screws tightened or connectors twistlocked).
- Inspect all interface-cable connections at free-standing peripherals for tightness and color coding as applicable.

- Verify that power cords are plugged into AC wall sockets and attached to free-standing peripherals permanently, or mated with flanged, wire inlets on free-standing peripherals as applicable. It should be noted that some power cords are supplied with mating connectors at opposite ends, and are easily detachable at both peripheral and primary power connections.

- Verify that electrical connections on free-standing peripherals are tight and secure.

Initial Startup

When all cabinets and free-standing peripherals have been interconnected and connected to AC power lines or AC wall sockets, initial startup can begin. Start at mainframe control panel first:

- Engage the circuit breaker on the PDU (within cabinet) and observe that the blower comes on and comes up to speed.

- Set ADDRESS/DATA switch in ADDRESS position.

- Set the rotary FUNCTION selector on the STORE Y position.

- Free the control panel LOCK and set in the ON position by use of the special key provided.

- Observe that the STOP lamp illuminates steady as the ADDRESS/DATA indicator lamps display the starting address.

Note

Addresses and data deposits are represented by a row of 16 indicator lamps which illuminate for a binary-one and extinguish for a binary-zero; a starting address of 1000 (octal) is represented when lamp 7 illuminates and all other extinguish.

- Momentarily press the DATA/CLEAR switch in the downward position and then release.

- Observe that all 16 indicator lamps extinguish.

- Momentarily press the MASTER CLEAR switch in the downward position and then release.

- Observe that the starting address is displayed by the indicator lamps (lamp 7 illuminates, all others extinguished).

Cabinet-mounted or free-standing peripherals are started as specified in the applicable OEM documentation supplied with the order.

Static Tests

The objective of the static tests is to power up all system equipment and evaluate performance in a running condition. Storage mediums (cartridge disks, diskettes or magnetic tape) will be installed in respective storage devices and brought up to speed; the mainframe system will be in RUN mode and all input/output peripherals will be in ON-LINE mode.

Power Up All Systems

Place all systems in the GO condition as specified:

- Teletypewriters: selector switch in LINE position
- User Terminals: selector switch in LINE position
- Disk Drives: ON, RUN, and PROT lamps illuminate steady
- Terminets: Toggle power switch in ON position
- Line Printers: Press ON pushbutton and observe that ON lamp illuminates steady.

Dynamic Tests

Prime will execute a procedure based on the specific customer configuration to verify operation of the installed hardware and demonstrate the system software.

Quality Assurance Report

Prime will complete the quality assurance audit report form provided (Figure 4-9) when installation and related testing are complete.

INSTALLATION FORM

Customer: _____ Contact: _____
Sales Order: _____ Type: _____
Serial No.: _____ Date (Started)_____ Date (Finished)_____
Total Time _____ Hrs.

I EQUIPMENT

	Complete	Short-Ship	Incomplete	Other	Problems
Major Units					
Peripherals					
Cables					
Other					

Comments _____

II SOFTWARE

	Complete	Short-Ship	Incomplete	Other	Problems
Master Volu.					
Diagnostics					
Other					

Comments _____

III DOCUMENTATION

	Complete	Short-Ship	Incomplete	Other	Problems
Hardware					
Software					
Vendor					
Other					

Comments _____

IV GENERAL

Comments _____

CSR NO. F.E. Representative

Figure 4-9. Quality Audit Report Format (Sheet 1 of 2)

V DIAGNOSTICS AND OPERATING SYSTEMS RUN

NAME	REV	TIME	PROBLEMS		NAME	REV	TIME	PROBLEMS

FOLD

FIRST CLASS
Permit No. 531
Framingham, MA 01701

BUSINESS REPLY MAIL
No Postage Stamp Necessary if Mailed in the United States
POSTAGE WILL BE PAID BY

PRIME COMPUTER, INC
145 PENNSYLVANIA AVENUE
FRAMINGHAM, MASSACHUSETTS 01701

ATTN M. Schaen

FOLD

STAPLE HERE

Figure 4-9. Quality Audit Report Format (Sheet 2 of 2)

APPENDIX A

GENERAL GUIDELINES FOR EQUIPMENT SPECIFICATION TABLES

GENERAL

The Equipment Specification Tables contain electrical, environmental-operating and physical requirements as applicable to all standard deliverable equipment currently marked by Prime. Listed products include cabinet-mounted systems, cabinet-mounted (or mountable) peripherals and free-standing peripherals.

PRODUCT NUMBER(S)

The product identification numbers listed in Equipment Specification Tables represent particular combinations of equipment. Cabinet-mounted systems (for example) are identified by an 11-digit, alphanumeric format as shown:

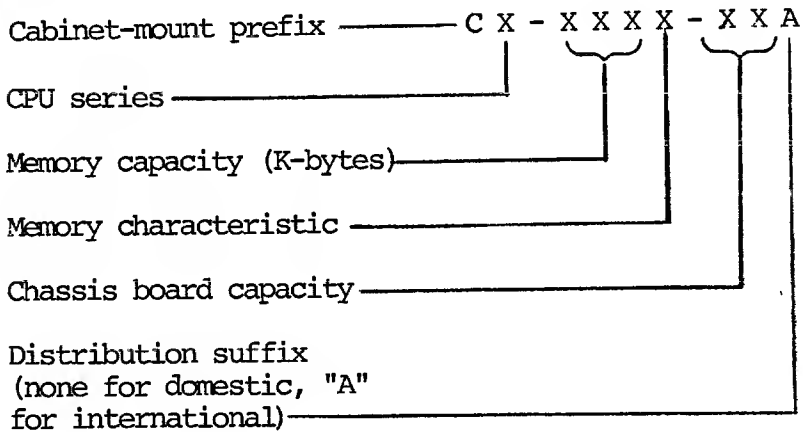

Cabinet-mounted (or mountable) peripherals and free-standing peripherals are identified by a numeric format.

DESCRIPTIONS

The second column of an Equipment Specification Table lists descriptive particulars not represented by product numbers:

PRODUCT NUMBER(S)	DESCRIPTION
C3-XXXX-1Ø	P300 Central System mounted in a mainframe cabinet and incorporating CPU and memory boards, interface modules and a modular power supply in a 10-board chassis; delivered with a control panel and system console (Terminet #30). Distributed USA.

The system console (Terminet #30) is a free-standing peripheral delivered with product C3-XXXX-10.

ELECTRICAL SPECIFICATIONS

The third through sixth columns of an Equipment Specification Table are used to list primary voltages, line frequencies, starting currents and running currents. Starting currents are excluded for cabinet-mounted systems and cabinet-mounted peripherals because such products draw their power from cabinet-enclosed PDU's exclusively.

ENVIRONMENTAL SPECIFICATIONS

Environmental specifications given include operating temperature requirements, relative humidity requirements and heat-generating capabilities of the applicable equipment. The humidity percentages are given for environments without condensation; the heat-generating capabilities are given in BTU/hour. Environmental specifications applicable to the computer-room are not included in the tables; therefore, heat leakage and loads estimated for a typical computer room are summarized below:

Unit/Component	BTU Per Hour Load
Exterior wall areas excluding windows	5 to 11 BTU/hr per sq. ft. dependent on exposure to sun
Thermopane window areas, clear glass, no protection	27 to 77 BTU/hr per sq. ft. dependent on exposure to sun
Thermopane window areas, glass with shades, blinds, tint	21 to 51 BTU/hr per sq. ft. dependent on exposure to sun
Roof areas with ceiling underneath	4 to 7 BTU/hr per sq. ft. dependent on exposure to sun
Interior wall areas exposed to unconditioned areas	8 to 14 BTU/hr per sq. ft. dependent on exposure to sun
Ceiling areas exposed to unconditioned areas	4 BTU/hr per sq. ft.
Floor areas exposed to unconditioned areas	5 to 9 BTU/hr per sq. ft. dependent on office/factory environment
Lighting	3.4 BTU/hr per watt
Personnel	500 BTU/hr per person

Fresh air ventilation @ 15 CFM per person	340 to 825 BTU/hr per person dependent on condition of incoming air
Safe Cooling Requirements	130% of Total BTU/hr calculated (30% is for growth and safety factor)
Minimum Sensible Cooling Requirements	110% of Total BTU/hr calculated

Note: 3.4 BTU/hr per Watt

WEIGHT OF EQUIPMENT

The weights given apply to specific equipment configurations represented by product numbers. The weight of a cabinet-mounted mainframe system is the sum-total of the cabinet and all systems and peripherals incorporated within but does not include the system console. Its weight is listed separately under model 3111 (A). If a product number represents a cabinet-mountable peripheral available for delivery in an OEM supplied chassis, then the weight of the peripheral is given independently of the cabinet.

CABLES AND POWER CONNECTIONS

All interface cables and power cords provided with deliverable products are referenced in the COMMENTS column of Equipment Specification Tables.

ALTITUDE

All altitude requirements are 0 to 10,000 feet (MSL) except as noted in the COMMENTS column.

ELECTRICIAN'S WORKSHEET (Figure A-1)

Schematic diagrams of the various AC power receptacles required for particular categories of Prime products distributed in domestic markets (USA) are given in Figure A-1 (a through d); schematic diagrams of the various AC power receptacles suggested for use with Prime products installed at international sites are given in Figure A-1 (e through f). An electrician should be given a copy of Figure A-1 (Electrician's Worksheet) to use as a working document when preparing a site.

DOMESTIC DISTRIBUTION

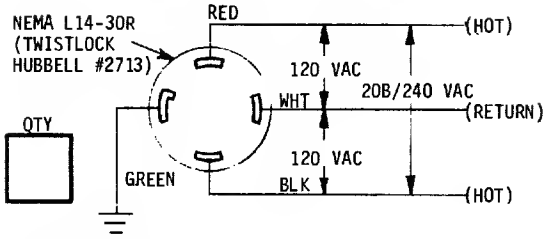

NOTE 1 APPLIES

a) MAINFRAME CABINETS(120/208 OR 120/240VAC,30A,60HZ SERVICE)

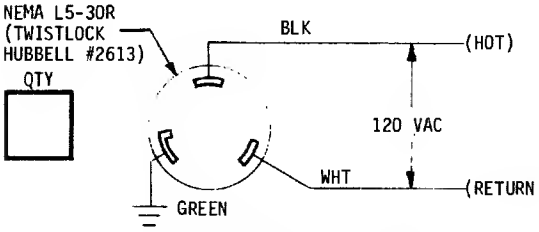

b) PERIPHERAL CABINETS(120 VAC, 30A, 60HZ)

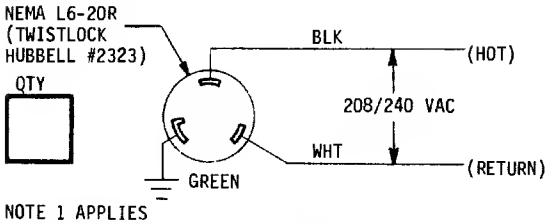

NOTE 1 APPLIES

c) 300-MEGABYTE DISK STORAGE MODULE, CARD READER/PUNCH OR CHARABAND PRINTER(208/240 VAC, 20A, 60HZ SERVICE)

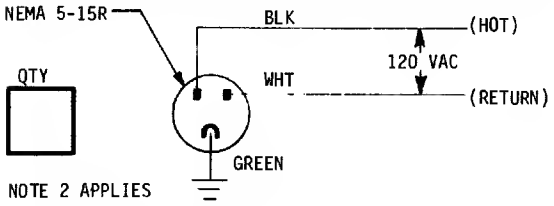

NOTE 2 APPLIES

d) STANDARD WALL SOCKETS(120 VAC, 15A, 60HZ SERVICE)

(2 SOCKETS FOR EACH PRODUCT 4261)
(1 SOCKET FOR PRODUCT 3135)
(1 SOCKET FOR TEST EQUIPMENT)

INTERNATIONAL DISTRIBUTION

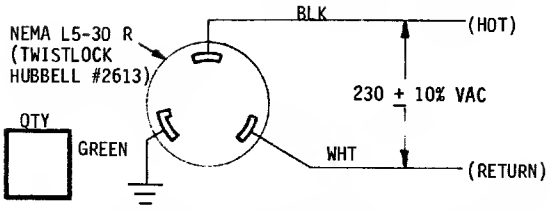

e) RECEPTACLE SHIPPED WITH MAINFRAME AND PERIPHERAL CABINETS (230 ± 10% VAC, 30A, 50 H_Z SERVICE)

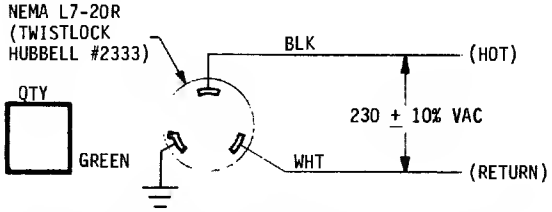

f) MATING RECEPTACLE FOR 300-MEGABYTE DISK STORAGE MODULE, CARD READER/PUNCH OR CHARABAND PRINTER (230 ± 10% VAC, 20A, 50 H_Z SERVICE)

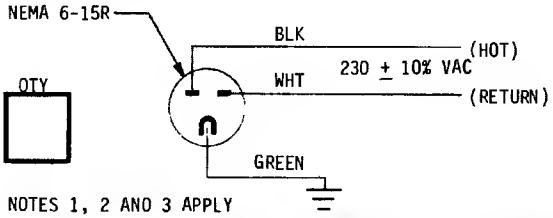

NOTES 1, 2 AND 3 APPLY

g) WALL SOCKET SUGGESTED FOR EUROPEAN INSTALLATIONS (230 ± 10% VAC, 15A, 50 H_Z SERVICE)

NOTE 1: 208 VAC AVAILABLE AT LARGE INDUSTRIAL INSTALLATIONS, 240 VAC AVAILABLE AT GENERAL BUSINESS OFFICES. (REFER TO FIGURES 2-1 AND 2-2.)

NOTE 2: ALL FREE-STANDING PERIPHERALS EXCEPT THE 300-MEGABYTE DISK STORAGE MODULES, CARD READER/PUNCHES AND CHARABAND PRINTERS ARE SHIPPED WITH MOULDED CORD-SET POWER CORD PLUGS (NEMA 5-15P.)

NOTE 3: PRIME WILL REPLACE ANY AMERICAN STYLE PLUG THAT IS FOUND TO BE PHYSICALLY INCOMPATIBLE WITH STANDARD AC WALL SOCKETS OR POWER-LINE RECEPTACLES AVAILABLE IN FOREIGN COMPUTER FACILITIES.

Figure A-1. Electrician's Worksheet

PRODUCT INDEX

The product index permits the customer to cross reference a sales order equipment list against the Equipment Specification Tables. All categories of hardware currently marketed by Prime are included in the product index. If a hardware item requires installation services (on site), reference is made to its Equipment Specification Table (A-1 through A-5). Hardware items shipped with systems for which no additional on-site installation is required (or provided) are designated "IAF" (Installed at Factory) in the product index, and do not qualify as applicable products. (Refer to Section I for an explanation of products applicable.)

All the products listed are marketed for distribution in the USA; product numbers are the same for international distribution except they are suffixed with the letter "A".

TYPE NUMBER	EQUIPMENT SPECIFICATIONS	TYPE NUMBER	EQUIPMENT SPECIFICATIONS
140 THRU 142	IAF	3135 THRU 3140	Table A-5
145 THRU 147	IAF	3142	Table A-5
150	IAF	3145 THRU 3150	Table A-5
151	IAF	3157 THRU 3159	Table A-5
157	IAF	3202	Table A-5
240 THRU 242	IAF	3205	Table A-5
245 THRU 247	IAF	3221 THRU 3225	Table A-5
250	IAF	4002	IAF
253	IAF	4003	IAF
257	IAF	4040 THRU 4046	Table A-2
260	IAF	4050	Table A-2
340 THRU 341	IAF	4051	Table A-2
346	IAF	4056 THRU 4061	Table A-2
347	IAF	4132	IAF
360 THRU 362	IAF	4133	Table A-5
369	IAF	4149	IAF
461	IAF	4166	Table A-3
3001	IAF	4167	Table A-3
3003	IAF	4205	Table A-5
3006 THRU 3009	IAF	4207	Table A-5
3022	IAF	4221	Table A-3
3023	IAF	4224	Table A-3
3025	IAF	4228	Table A-3
3031	IAF	4233	Table A-5
3032	IAF	4234	IAF
3101	Table A-5	4245	Table A-5
3103	Table A-5	4246	Table A-5
3111	Table A-5	4247	Table A-5
3113	Table A-5	4251	Table A-5
3119	Table A-5	4252	Table A-5
3120	Table A-5	4255	Table A-5
3121 THRU 3123	Table A-3	4261 THRU 4264	Table A-5
3127	Table A-5	4271 THRU 4274	Table A-5
3133	Table A-5	4300	Table A-3
3134	Table A-5	4302	Table A-3

TYPE NUMBER	EQUIPMENT SPECIFICATIONS	TYPE NUMBER	EQUIPMENT SPECIFICATIONS
4304	Table A-3	7520 THRU 7902	Table A-4
4310	Table A-3	9502	IAF
4314	Table A-3	9503	IAF
5002	IAF	AMM-064B	IAF
5004	IAF	AMM-064D	IAF
5052	IAF	AMM-256B	IAF
5054	IAF	AMM-256D	IAF
5072	IAF	AMM-256E	IAF
5074	IAF	C3-XXXX-10	Table A-1
5075	IAF	C4-XXXX-17	Table A-1
5302	IAF	C5-XXXX-17	Table A-1
5304	IAF	MEU1-256E	IAF
5312	IAF	MEU2-256E	IAF
5314	IAF	P1008A-05,-10,-17*	IAF
5322	IAF	P1016A-05,-10,-17*	IAF
5324	IAF	P1032A-05,-10,-17*	IAF
5346	IAF	P1048A-05,-10,-17*	IAF
5347	IAF	P1064A-05,-10,-17*	IAF
5350	IAF	P2008B-05,-10,-17*	IAF
5351	IAF	P2016B-05,-10,-17*	IAF
5402 THRU 5403	IAF	P2032B-05,-10,-17*	IAF
5404	IAF	P2064B-05,-10,-17*	IAF
6000 THRU 6005	IAF	P3-016B-05*	IAF
6013	IAF	P3-032B-05*	IAF
6020 THRU 6023	IAF	P3-064B-05,-10,-17*	IAF
6029	IAF	P3-096B-05*	IAF
6040 THRU 6043	IAF	P3-128B-05*	IAF
6049	IAF	P3-192B-05*	IAF
6060	IAF	P4-128D-17*	IAF
6061	IAF	P4-256D-17*	IAF
7000	IAF	P5-256E-17*	IAF
7010	IAF	UC100	IAF
7030	IAF	UC110	IAF
7031	IAF	UC120	IAF
7511	IAF	UG300-400	IAF
7520 THRU 7901	Table A-4	UG300-500	IAF
		UG400-500	IAF

*If ordered with a mainframe cabinet refer to equivalent Product number prefixed "C" in Table A-1. Otherwise, refer to SPC 2892, 'Chassis Mounting for OEM's.

EQUIPMENT SPECIFICATION TABLE

NOTES:

(1) MAINFRAME AND PERIPHERAL CABINETS ARE EQUIPPED WITH POWER DISTRIBUTION UNITS (PDU'S) WHICH DISTRIBUTE 115 ± 10% VAC (USA) AND 230 ± 10% VAC (INTERNATIONAL) TO CENTRAL SYSTEMS AND PERIPHERALS MOUNTED WITHIN.

(2) MAINFRAME AND PERIPHERAL CABINETS ARE ALSO EQUIPPED WITH BLOWERS THAT CAN CIRCULATE AIR ACROSS THE PRINTED-CIRCUIT BOARDS OF CENTRAL SYSTEMS OR PERIPHERALS AT 200 CFM.

(3) SPECIFICATIONS FOR CABINET-MOUNTED SYSTEMS DO NOT INCLUDE THE SYSTEM CONSOLE (TERMINET #30; PRODUCT 3111, 3111A, 3113, AND 3113A) DELIVERED WITH CENTRAL SYSTEMS (PRODUCT CX-XXXX-XX).

(4) SYSTEM CONSOLES (TERMINET #30'S) ORDERED UNDER CENTRAL-SYSTEM PRODUCT NUMBERS ARE INSTALLED SEPARATELY AS FREE-STANDING PERIPHERALS.

(5) MAGNETIC TAPE TRANSPORTS (SUBSYSTEMS) ARE ALWAYS DELIVERED INSTALLED IN PERIPHERAL CABINETS.

(6) CARTRIDGE DISK DRIVES, DISKETTE DRIVES AND PAPER TAPE READER/PUNCHES ARE NORMALLY INSTALLED IN MAINFRAME OR PERIPHERAL CABINETS ALTHOUGH ORDERED SEPARATELY AS CABINET-MOUNTABLE EQUIPMENT.

(7) CABINET-MOUNTED OR CABINET-MOUNTABLE PERIPHERALS ARE SHIPPED WITH AMERICAN STYLE PLUGS (NEMA 5-15P).

(8) FREE-STANDING PERIPHERALS ARE SHIPPED WITH AMERICAN STYLE PLUGS (NEMA 5-15P) EXCEPT FOR CHARABAND PRINTERS (PRODUCTS 3138, 3138A, 3148 and 3148A), CARD READER/PUNCHES (PRODUCTS 3158 AND 3158A) AND 300-MEGABYTE DISK STORAGE MODULES (PRODUCTS 4247, 4247A, 4271, 4271A, 4272, 4272A, 4273, 4273A, 4274 and 4274A) WHICH ARE SHIPPED WITH HUBBELL TYPE #2323 TWISTLOCK PLUG-CONNECTORS (NEMA L6-20P).

(9) FOR ALL PRODUCTS APPLICABLE, PROBABILITY OF FAILURE DOUBLES FOR EACH 10 DEGREES (C) OF HEAT RISE ABOVE THE RECOMMENDED 20 TO 26 C (68 to 78F) OPERATIONAL ENVIRONMENT (ACCORDING TO THE ARRHENIUS MODEL).

EQUIPMENT SPECIFICATION TABLE A-1

PRODUCT NUMBER(S)	DESCRIPTION	ELECTRICAL				ENVIRONMENTAL (OPERATIONAL)			WT. (LBS)	DIMENSIONS (INCHES)			NOTES & COMMENTS
		VAC	HZ	AMPS START	AMPS RUN	TEMP. (AMBIENT)	HUMIDITY (RELATIVE)	BTU PER HOUR		H	W	D	
	CABINET-MOUNTED SYSTEMS												NOTES 1 THROUGH 4 AND 9 APPLY.
C3-XXXX-10	P300 CENTRAL SYSTEM MOUNTED IN A MAINFRAME CABINET AND INCORPORATING CPU AND MEMORY BOARDS, INTERFACE MODULES AND A MODULAR POWER SUPPLY IN A 10-BOARD CHASSIS; DELIVERED WITH A CONTROL PANEL AND A CONSOLE (TERMINET #30). DISTRIBUTED USA	120/240, 30A 120/208, 30A SERVICE (FIGURE A-1.a)	60		15.0 TYPICAL AT 115±10% VAC	0 TO 40°C	UP TO 90%	4000	300	62	25	38	COMMENT: 9-FOOT POWER CORD PROVIDED WITH TWISTLOCK CONNECTORS.
C3-XXXX-10A	SAME AS C3-XXXX-10 (ABOVE) EXCEPT DISTRIBUTED INTERNATIONALLY.	230, 30A SERVICE (FIGURE A-1.e)	50		7.5 TYPICAL AT 230±10%	0 TO 40°C	UP TO 90%	4000	300 (136 kg)	62 (159.8 cm)	25 (65.5 cm)	38 (80.5 cm)	COMMENTS: (1) NO POWER CORD PROVIDED. (2) TWISTLOCK RECEPTACLE-CONNECTOR PROVIDED WITH 3-WIRE STYLE PDU.
C3-XXXX-17 C4-XXXX-17 C5-XXXX-17	P300, P400 AND P500 CENTRAL SYSTEMS MOUNTED IN MAINFRAME CABINETS AND INCORPORATING CPU AND MEMORY BOARDS, INTERFACE MODULES, AND MODULAR POWER SUPPLIES IN 17-BOARD CHASSIS; DELIVERED WITH CONTROL PANELS AND CONSOLES (TERMINET #30). DISTRIBUTED USA.	120/240, 30A OR 120/208, 30A SERVICE (FIGURE A-1.a)	60		17.0 20.0 24.0 RESPECTIVELY TYPICAL AT 115±10% VAC	0 TO 40°C	UP TO 90%	5000 6000 7000 RESPECTIVELY	375	62	25	38	COMMENT: SAME AS FOR PRODUCT C3-XXXX-10.
C3-XXXX-17A C4-XXXX-17A C5-XXXX-17A	SAME AS C3-XXXX-17, C4-XXXX-17 AND C5-XXXX-17 (ABOVE) EXCEPT DISTRIBUTED INTERNATIONALLY	230, 30A SERVICE (FIGURE A-1.e)	50		8.5 10.0 12.0 RESPECTIVELY TYPICAL AT 230±10% VAC	0 TO 40°C	UP TO 90%	5000 6000 7000 RESPECTIVELY	375 (136 kg)	62 (159.9 cm)	25 (65.5 cm)	38 (80.5 cm)	COMMENT: SAME AS PRODUCT C3-XXXX-10A (ABOVE).

EQUIPMENT SPECIFICATION TABLE A-2

PRODUCT NUMBER(S)	DESCRIPTION	ELECTRICAL				ENVIRONMENTAL (OPERATIONAL)			WT. (LBS)	DIMENSIONS (INCHES)			NOTES & COMMENTS
		VAC	HZ	AMPS START	AMPS RUN	TEMP. (AMBIENT)	HUMIDITY (RELATIVE)	BTU PER HOUR		H	W	D	
	CABINET-MOUNTED PERIPHERALS												NOTES 5, 7 AND 9 APPLY
4040 THRU 4046 4050 4051 4056 THRU 4060	45 OR 75 IPS MAGNETIC TAPE SUBSYSTEMS MOUNTED IN PERIPHERAL CABINETS. DISTRIBUTED USA.	120 , 30A SERVICE (FIGURE A-1.b)	60		5.1 7.3 RESPECTIVELY TYPICAL AT 115±10% VAC	+15 TO +32°C	20 TO 80%	1900 3754 RESPECTIVELY FOR 45 AND 75 IPS MODELS	235 305	62	25	38	COMMENT: 9-FOOT POWER CORD PROVIDED WITH TWISTLOCK CONNECTORS.
4040A THRU 4046A 4050A 4051A 4056A THRU 4060A	SAME AS FOR PRODUCT 4040 (ABOVE) EXCEPT DISTRIBUTED INTERNATIONALLY	230 , 30A SERVICE (FIGURE A-1.e)	50		2.7 4.6 RESPECTIVELY TYPICAL AT 230±10% VAC	+15 TO +32°C	20 TO 80%	1900 3754 RESPECTIVELY	235 305 RESPECTIVELY (106.6kg) (138.8kg)	62 (159.9 cm)	25 (65.5 cm)	38 (80.5 cm)	COMMENTS: 1) NO POWER CORD PROVIDED. 2) TWISTLOCK RECEPTACLE-CONNECTOR PROVIDED WITH 3-WIRE STYLE PDU

EQUIPMENT SPECIFICATION TABLE A-3 (SHEET 1 OF 2)

PRODUCT NUMBER(S)	DESCRIPTION	ELECTRICAL				ENVIRONMENTAL (OPERATIONAL)			WT. (LBS)	DIMENSIONS (INCHES)			COMMENTS
		VAC	HZ	AMPS START	AMPS RUN	TEMP. (AMBIENT)	HUMIDITY (RELATIVE)	BTU PER HOUR		H	W	D	
	CABINET-MOUNTABLE PERIPHERALS (ITEMS CAPABLE OF STANDING ALONE, BUT MOUNTABLE IN PRIME CABINETS).												NOTES 6, 7 AND 9 APPLY.
3121	PAPER TAPE READER/PUNCH DISTRIBUTED USA	115±10%	60	3.5	1.0	+4 TO +50°C	UP TO 90%	390	15	7	19	6	COMMENTS: 1) 10-FOOT INTERFACE CABLE PROVIDED. 2) 6-FOOT POWER CORD PROVIDED WITH 3-WIRE PLUG. 3) SPECIFICATIONS APPLY TO PERIPHERAL ONLY. (PERIPHERAL CABINETS EXCLUDED).
3121A	PAPER TAPE READER/PUNCH DISTRIBUTED INTERNATIONALLY	230±10%	50	1.7	0.5	+4 TO +50°C	UP TO 90%	390	15 (6.8 kg)	7 (17.8 cm)	19 (46.3 cm)	6 (15.3 cm)	
3122	PAPER TAPE READER/PUNCH DISTRIBUTION USA	115±10%	60	7.7	2.2	+4 TO +50°C	UP TO 90%	800	46.5	10.5	19	14.5	
3122A	PAPER TAPE READER/PUNCH DISTRIBUTION INTERNATIONALLY	230±10%	50	3.8	1.1	+4 TO +50°C	UP TO 90%	800	46.5 (21.1 kg)	10.5 (25.4 cm)	19 (46.3 cm)	14.5 (35.6 cm)	
3123	PAPER TAPE READER/PUNCH DISTRIBUTION USA	115±10%	60	7.7	2.2	+4 TO +50°C	UP TO 90%	800	46.5	10.5	19	14.5	
3123A	PAPER TAPE READER/PUNCH DISTRIBUTION INTERNATIONALLY	230±10%	50	3.8	1.1	+4 TO +50°C	UP TO 90%	800	46.5 (21.1 kg)	10.5 (25.4 cm)	19 (46.3 cm)	14.5 (35.6 cm)	
4166 4167 4300 4302 4304 4310 4314	DISKETTE DRIVE (FLOPPY) SHUGART TYPE SA100, NORMALLY CABINET MOUNTED, DISTRIBUTION USA.	115±10%	60	1.26	0.46	+10 TO +40°C	20 TO 80%	1600	50	12.2	19	20	COMMENTS: 1) 15-FOOT INTERFACE CABLE PROVIDED. 2) 6-FOOT POWER CORD WITH 3-WIRE PLUG PROVIDED. 3) OPERATING ALTITUDE: 0 TO 7.5 K FEET (MSL)
4166A 4167A 4300A 4302A 4304A 4310A 4314A	SAME AS 4166, 4167, 4300, 4302, 4304, 4310 AND 4314 (ABOVE) EXCEPT DISTRIBUTED INTERNATIONALLY.	230±10%	50	0.91	0.33	+10 TO +40°C	20 TO 80%	1600	50 (22.9 kg)	12.2 (31.1 cm)	19 (46.3 cm)	20 (50.7 cm)	

EQUIPMENT SPECIFICATION TABLE A-3 (SHEET 2 OF 2)

PRODUCT NUMBER(S)	DESCRIPTION	ELECTRICAL				ENVIRONMENTAL (OPERATIONAL)			WT. (LBS)	DIMENSIONS (INCHES)			COMMENTS
		VAC	HZ	AMPS		TEMP. (AMBIENT)	HUMIDITY (RELATIVE)	BTU PER HOUR		H	W	D	
				START	RUN								
4205 4207	512K M BYTE FXD HD DISK DRIVE DISTRIBUTED USA.	115±10%	60±3	2.5	0.6	0 TO +45°C	5 TO 95%	410	100	14	15	17	COMMENTS: 1) 10-FOOT INTERFACE CABLE PROVIDED. 2) 6-FOOT POWER CORD PROVIDED WITH 3-WIRE PLUG. 3) SPECIFICATIONS APPLY TO PERIPHERAL ONLY. (PERIPHERAL CABINETS EXCLUDED). 4) OPERATING ALTITUDE: 0 TO 7.5 K FEET (MSL).
4205A 4207A	512K M BYTE FXD HD DISK DRIVE DISTRIBUTED INTERNATIONALLY.	230±10%	50±3	1.25	0.3	0 TO +45°C	5 TO 95%	410	100 (45.4 kg)	14 (35.6 cm)	15 (38.1 cm)	17 (43.2 cm)	
4228	MOVING HEAD DISK DRIVE (12M BYTE), TOP LOAD. NORMALLY CABINET MOUNTED, DISTRIBUTED USA.	115±10%	60	12.75	4.63	+10 TO +40°C	5 TO 85%	1200	116	9	19	29.5	COMMENTS: 1) 15-FOOT INTERFACE CABLE PROVIDED. 2) 6-FOOT POWER CORD WITH 3-WIRE PLUG PROVIDED. 3) OPERATING ALTITUDE: 0 TO 7.5 K FEET (MSL)
4228A	SAME AS 4228 (ABOVE) EXCEPT DISTRIBUTED INTERNATIONALLY	230±10%	50	6.37	2.31	+10 TO +40°C	5 TO 85%	1200	116 (52.6 kg)	9 (22.9 cm)	19 (46.3 cm)	29.5 (75 cm)	

EQUIPMENT SPECIFICATION TABLE A-4

PRODUCT NUMBER(S)	DESCRIPTION	ELECTRICAL				ENVIRONMENTAL (OPERATIONAL)			WT. (LBS)	DIMENSIONS (INCHES)			NOTES & COMMENTS
		VAC	HZ	AMPS START	AMPS RUN	TEMP. (AMBIENT)	HUMIDITY (RELATIVE)	BTU PER HOUR		H	W	D	
	PRIME CABINETS												NOTES 1, 2 AND 9 APPLY
7520-901	COMPUTER MAINFRAME CABINET (WITH PDU AND BLOWER), DISTRIBUTED USA. (USED TO HOUSE COMPUTER SYSTEMS AND PERIPHERALS	120/240 , 30A 120/208 , 30A SERVICE, FIG A-1.a	60		2.8	0 TO +50°C	UP TO 90%	854	150	62	25	38	COMMENTS: SAME AS C3-XXXX-10 (TABLE A-1)
7520-901A	SAME AS 7520-901 (ABOVE) EXCEPT DISTRIBUTED FOR INTERNATIONAL MARKETS.	230 , 30A SERVICE, FIG A-1.e	50		1.4	0 TO 50°C	UP TO 90%	854	150 (68 kg)	62 (159.8 cm)	25 (65.5 cm)	38 (80.5 cm)	COMMENTS: SAME AS C3-XXXX-10A (TABLE A-1)
7520-902	PERIPHERAL CABINET (WITH PDU AND BLOWER), DISTRIBUTED USA. (USED TO HOUSE PERIPHERALS)	120 , 30A SERVICE, FIG A-1.b	60		2.8	0 TO 50°C	UP TO 90%	854	150	62	25	38	COMMENTS: SAME AS PRODUCT 4040 (TABLE A-2)
7520-902A	SAME AS 7520-902 (ABOVE) EXCEPT DISTRIBUTED FOR INTERNATIONAL MARKETS.	230 , 30A SERVICE (FIGURE A-1.e)	50		1.4	0 TO 50°C	UP TO 90%	854	150 (68 kg)	62 (159.8 cm)	25 (65.5 cm)	38 (80.5 cm)	COMMENTS: SAME AS PRODUCT 4040A (TABLE A-2)

EQUIPMENT SPECIFICATION TABLE A-5 (SHEET 1 OF 5)

PRODUCT NUMBER(S)	DESCRIPTION	ELECTRICAL				ENVIRONMENTAL (OPERATIONAL)			WT. (LBS)	DIMENSIONS (INCHES)			COMMENTS
		VAC	HZ	AMPS START	AMPS RUN	TEMP. (AMBIENT)	HUMIDITY (RELATIVE)	BTU PER HOUR		H	W	D	
	FREE-STANDING PERIPHERALS												NOTES 8 AND 9 APPLY
3101	TELETYPEWRITER (ASR-33) WITH STAND AND PAPER TAPE PUNCH, DISTRIBUTED USA.	115±10% (FIGURE A-1.d)	60	15.0	3.0	+4 TO +44°C	2 TO 95%	850	60	33.25	22	18.5	COMMENTS: 1) 25-FOOT INTERFACE CABLE PROVIDED. 2) 10-FOOT POWER CORD WITH 3-WIRE PLUG.
3101A	SAME AS 3101 (ABOVE) EXCEPT DISTRIBUTED FOR INTERNATIONAL MARKETS.	230±10% (FIGURE A-1.g)	50	7.5	1.5	+4 TO +44°C	2 TO 95%	850	60 (27.3 kg)	33.25 (83.0 cm)	22 (55.9 cm)	18.5 (46.9 cm)	
3103	TELETYPEWRITER (KSR-33) WITH STAND, DISTRIBUTED USA.	115±10% (FIGURE A-1.d)	60	15.0	3.0	+4 TO +44°C	2 TO 95%	850	55	33.25	22	18.5	
3103A	SAME AS 3103 (ABOVE) EXCEPT DISTRIBUTED FOR INTERNATIONAL MARKETS.	230±10% (FIGURE A-1.g)	50	7.5	1.5	+4 TO +44°C	2 TO 95%	850	55 (23.5 kg)	33.25 (83.0 cm)	22 (55.9 cm)	18.5 (46.9 cm)	
3111 AND 3113	TERMINET-30 PRINTER, GEK 36113A WITH PEDESTAL MARKETED USA	115±10% (FIGURE A-1.d)	60		2.3	0 TO +44°C	10 TO 95%	604	98	42.6	22.6	21.8	COMMENTS: 1) 30-FOOT INTERFACE CABLE PROVIDED. 2) 10-FOOT POWER CORD PROVIDED WITH 3-WIRE PLUG.
3111A AND 3113A	SAME AS 3111 AND 3113 (ABOVE) EXCEPT DISTRIBUTED FOR INTERNATIONAL MARKETS.	230±10% (FIGURE A-1.g)	50		1.1	0 TO +44°C	10 TO 95%	604	98 (44.1 kg)	42.6 (108.2 cm)	22.6 (57.5 cm)	21.8 (55.5 cm)	
3119 3120 3129	USER TERMINAL (CRT TYPE) DISTRIBUTION USA	115±10% (FIGURE A-1.d)	60		1.2	+5 TO +44°C	5 TO 95%	510	40	16	17	15	COMMENT: 10-FOOT POWER CORD PROVIDED WITH 3-WIRE PLUG.

EQUIPMENT SPECIFICATION TABLE A-5 (SHEET 2 OF 5)

PRODUCT NUMBER(S)	DESCRIPTION	ELECTRICAL				ENVIRONMENTAL (OPERATIONAL)			WT. (LBS)	DIMENSIONS (INCHES)			NOTES & COMMENTS
		VAC	HZ	AMPS START	AMPS RUN	TEMP. (AMBIENT)	HUMIDITY (RELATIVE)	BTU PER HOUR		H	W	D	
3119A 3120A 3129A	USER TERMINAL (CRT TYPE) DISTRIBUTION INTERNATIONALLY	230±10% (FIGURE A-1.g)	50		0.6	+5 TO +50°C	5 TO 95%	510	40 (18.2 kg)	16 (40.6 cm)	17 (43.9 cm)	15 (38.0 cm)	COMMENTS: SAME AS 3119, 3120 AND 3129 (PRECEEDING SHEET)
3133 AND 3134	SERIAL INTERFACE PRINTER, TALLY SERIES 2000, DISTRIBUTED USA.	115±10% (FIGURE A-1.d)	60		6.9	+10 TO 40°C	5 TO 95%	2730	150	11	28	24.5	COMMENTS: 1) 10-FOOT INTERFACE CABLE PROVIDED. 2) 6-FOOT POWER CORD PROVIDED WITH 3-WIRE PLUG.
3133A AND 3134A	SAME AS 3133 AND 3134 (ABOVE) EXCEPT DISTRIBUTED FOR INTERNATIONAL MARKETS.	230±10% (FIGURE A-1.g)	50		3.5	+10 TO +40°C	5 TO 95%	2730	150 (68.04 kg)	11 (27.9 cm)	28 (71.1 cm)	24.5 (62.2 cm)	
3135 3145 3149	TALLY LINE PRINTER, 200/200 /165 LPM, SERIES 2000, DISTRIBUTED USA.	115±10% (FIGURE A-1.d)	60±0.5		6.9 (MAX)	+10° TO +40°C	5 TO 95% (NON-CONDENSING)	2730	150	11.0	28.0	24.5	COMMENTS: 1) 40-FOOT INTERFACE CABLE PROVIDED. 2) 6-FOOT POWER CORD WITH RECEPTACLE AND PLUG PROVIDED.
3135A 3145A 3149A	SAME AS 3135, 3145, AND 3149 (ABOVE) EXCEPT DISTRIBUTED FOR INTERNATIONAL MARKETS.	230±10% (FIGURE A-1.g)	50		3.5 (MAX)	+10° TO +40°C	5 TO 95%	2730	150 (68.04 kg)	11.0 (27.9 cm)	28.0 (71.1 cm)	24.5 (62.2 cm)	
3136 3137 3140 3142 3146 3147 3150 3157	CHAIN PRINTER (MEDIUM SPEED), DISTRIBUTION USA.	115±10% (FIGURE A-1.d)	60±1	15	6	+4° TO +35°C	5 TO 95%	2700	570	42	36.5	32	COMMENTS: 1) 40-FOOT INTERFACE CABLE PROVIDED. 2) 6-FOOT POWER CORD WITH 3-WIRE PLUG PROVIDED. 3) POWER CORD CONNECTS WITH PRINTER POWER SUPPLY INTERNALLY.
3136A 3137A 3140A 3142A 3146A 3147A 3150A 3157A	SAME AS 3136 THROUGH 3157 (ABOVE) EXCEPT DISTRIBUTED FOR INTERNATIONAL MARKETS.	230±10% (FIGURE A-1.g)	50	10	3	+4° TO +35°C	5 TO 95%	2700	570 (258.5 kg)	42 (106.7 cm)	36.5 (92.7 cm)	32 (81.3 cm)	

EQUIPMENT SPECIFICATION TABLE A-5 (SHEET 3 OF 5)

PRODUCT NUMBER(S)	DESCRIPTION	ELECTRICAL				ENVIRONMENTAL (OPERATIONAL)			WT. (LBS)	DIMENSIONS (INCHES)			NOTES & COMMENTS
		VAC	HZ	AMPS START	AMPS RUN	TEMP. (AMBIENT)	HUMIDITY (RELATIVE)	BTU PER HOUR		H	W	D	
3138 3148	CHARABAND PRINTER, DATA PRODUCTS MODEL 2550, DISTRIBUTED USA	208±10% (FIGURE A-1.c)	60		15	+10° TO +43°C	10 TO 90%	11,150	950	48	48.5	48.5	COMMENTS: 1) 40-FOOT INTERFACE CABLE PROVIDED. 2) 12-FOOT POWER CORD WITH NEMA L6-20P CONNECTOR PROVIDED.
3138A 3148A	SAME AS 3138 AND 3148 (ABOVE) EXCEPT DISTRIBUTED FOR INTERNATIONAL MARKETS.	220±10% (FIGURE A-1.f)	50±1%		15	0 TO +50°C	10 TO 90%	11,150	950 (430.9 kg)	48 (121.9 cm)	48.5 (123.2 cm)	48.5 (123.2 cm)	
3158	CARD READER/PUNCH, DOCUMATION MODEL LC-50, DISTRIBUTED USA.	208±10% (FIGURE A-1.c)	60±1%	28	12	+10 TO +38°C	30 TO 90%	2700	570	41	44	28	COMMENTS: 1) 20-FOOT INTERFACE CABLE PROVIDED. 2) 9-FOOT POWER CORD PROVIDED WITH TWISTLOCK CONNECTORS.
3158A	SAME AS 3158 (ABOVE) EXCEPT DISTRIBUTION FOR INTERNATIONAL MARKETS.	220±10% (FIGURE A-1.f)	50±1%	14	6	+10 TO +38°C	30 TO 90%	2700	570 (258.5 kg)	41 (104.2 cm)	44 (112.0 cm)	28 (71.1 cm)	
3159	CARD READER, DOCUMATION MODEL M200, DISTRIBUTED USA.	115±10% (FIGURE A-1.d)	60	12.4	4.0	+10 TO +38°C	30 TO 90%	5630	60	11	19.25	14	COMMENTS: 1). 20-FOOT INTERFACE CABLE PROVIDED. 2) 12-FOOT POWER CORD PROVIDED WITH PLUG AND RECEPTACLE AT OPPOSING ENDS. 3) 3-WIRE AC INLET (REAR BOTTOM). 4) OPERATING ALTITUDE: -1K TO 6K FEET (MSL)
3159A	SAME AS 3159 (ABOVE) EXCEPT DISTRIBUTED FOR INTERNATIONAL MARKETS.	230±10% (FIGURE A-1.g)	50	7.6	1.9	+10 TO +38°C	30 TO 90%	5630	60 (27.3 kg)	11 (27.9 cm)	19.25 (48.9 cm)	14 (35.5 cm)	
3202 AND 3205	PRINTER/PLOTTER, VERSATEC MODELS 1100A AND 1200A, DISTRIBUTED USA.	115±10% (FIGURE A-1.d)	60		6.5	0 TO 50°C	5 TO 95%	3010	180	38	28	18	COMMENTS: 1) 6-FOOT POWER CORD PROVIDED WITH 3-WIRE PLUG.
3202A AND 3205A	SAME AS 3202 AND 3205 (ABOVE) EXCEPT DISTRIBUTED FOR INTERNATIONAL MARKETS.	230±10% (FIGURE A-1.g)	50		3.2	0 TO 50°C	5 TO 95%	3010	180 (90.6 kg)	38 (96.6 cm)	28 (71.1 cm)	18 (45.7 cm)	
3221 3222	USER TERMINAL (CRT TYPE) DISTRIBUTION USA	115±10% (FIGURE A-1.d)	60		1.5	0 TO 45°C	UP TO 80%	511	50	19.5	21.5	23.5	COMMENTS: 1) 10-FOOT POWER CORD PROVIDED WITH 3-WIRE PLUG. 2) ALSO REFERRED TO AS THE FOX.

EQUIPMENT SPECIFICATION TABLE A-5 (SHEET 4 OF 5)

PRODUCT NUMBER(S)	DESCRIPTION	ELECTRICAL				ENVIRONMENTAL (OPERATIONAL)			WT. (LBS)	DIMENSIONS (INCHES)			NOTES & COMMENTS
		VAC	HZ	AMPS START	AMPS RUN	TEMP. (AMBIENT)	HUMIDITY (RELATIVE)	BTU PER HOUR		H	W	D	
3221A 3222A	USER TERMINAL (CRT TYPE) DISTRIBUTION INTERNATIONALLY	230+10% (FIGURE A-1.g)	50		0.75	0 TO 45°C	UP TO 80%	511	50 (27.7 kg)	19.5 (49.5 cm)	21.5 (54.6 cm)	23.5 (59.6 cm)	COMMENTS: SAME AS 3221 AND 3222 (PRECEDING SHEET)
3223 3225	USER TERMINAL (CRT TYPE) DISTRIBUTION USA.	115+10% (FIGURE A-1.d)	60		1.5	0 TO 45°C	UP TO 80%	511	50	19.5	21.5	23.5	COMMENTS: 1) 10-FOOT POWER CORD PROVIDED WITH 3-WIRE PLUG. 2) ALSO REFERRED TO AS THE OWL.
3223A 3225A	USER TERMINAL (CRT TYPE) DISTRIBUTION INTERNATIONALLY	230+10% (FIGURE A-1.g)	50		0.75	0 TO 45°C	UP TO 80%	511	50 (22.7 kg)	19.5 (49.5 cm)	21.5 (54.6 cm)	23.5 (59.6 cm)	
4245 4246 4251 4252 4255 4261 4262 4263 4264	40 AND 80M DISK STORAGE MODULE, DISTRIBUTED USA.	120+18, -8% (FIGURE A-1.d)	60	30.0	8.2	+20 TO +32°C	10 TO 80%	2390	243	34	19	34	COMMENTS: 1) 10-FOOT POWER CORD PROVIDED WITH 3-WIRE TWISTLOCK PLUG. 2) POWERED FROM AC WALL OUTLET. 3) OPERATING ALTITUDE: -1k TO 6k FEET (MSL)
4245A 4246A 4251A 4252A 4255A 4261A 4262A 4263A 4264A	SAME AS 4245, 4246, 4251, 4252, 4255, 4261, 4262, 4263, AND 4264 (ABOVE) EXCEPT DISTRIBUTED FOR INTERNATIONAL MARKETS.	220+15, -25% (FIGURE A-1.g)	50	22.0	4.9	+20 TO +32°C	10 TO 80%	2390	243 (106.2 kg)	34 (86.4 cm)	19 (46.3 cm)	34 (86.4 cm)	

EQUIPMENT SPECIFICATION TABLE A-5 (SHEET 5 OF 5)

PRODUCT NUMBER(S)	DESCRIPTION	ELECTRICAL				ENVIRONMENTAL (OPERATIONAL)			WT. (LBS)	DIMENSIONS (INCHES)			NOTES & COMMENTS
		VAC	HZ	AMPS START	AMPS RUN	TEMP. (AMBIENT)	HUMIDITY (RELATIVE)	BTU PER HOUR		H	W	D	
4247 4271 4272 4273 4274	300M BYTE DISK STORAGE MODULE DISTRIBUTED USA.	208+29, -14% (FIGURE A-1.c)	60	39.0	8.0	+15 TO +32°C	20 TO 80%	4550	550	36	23	36	COMMENTS: 1) 6-FOOT POWER CORD PROVIDED WITH 3-WIRE TWISTLOCK PLUG. 2) OPERATING ALTITUDE: -1K TO 6K FEET (MSL)
4247A 4271A 4272A 4273A 4274A	SAME AS 4247, 4271, 4272, 4273, AND 4274 (ABOVE) EXCEPT DISTRIBUTED FOR INTERNATIONAL MARKETS.	220+15, -25% (FIGURE A-1.f)	50	19.5	4.7	+15 TO +32°C	20 TO 80%	4550	550 (249.5 kg)	36 (91.4 cm)	23 (58.4 cm)	36 (91.4 cm)	

APPENDIX B

CABLE IDENTIFICATION DATA

The data herein permits the customer to determine the linear distances allowable between installed equipments, and identify the cables provided with particular products.

When planning an installation site, consult Appendix B by product number for cable-identification numbers and overall cable lengths. Cable lengths are of particular interest because they limit the distances allowable between mainframe systems and peripherals. The customer initiates his layout plan by locating the controller unit (mainframe cabinet) first, and then he locates peripheral cabinets and free-standing peripherals. Peripheral cabinets are normally placed at locations that abut the controller-unit location; free-standing peripherals are normally placed at locations close enough to the controller unit to permit interconnection of cables and installed units.

Lengths are not given for cables used to interconnect magnetic-tape transports and mainframe systems because cabinet-mounted peripherals and cabinet-mounted systems are normally installed in abutting cabinets. Cables provided with magnetic-tape transports (Table B-1) have color-coded receptacles at both ends and their overall lengths are cut as required to interconnect between abutting cabinets.

Lengths are given for cables used to interconnect cabinet-mountable peripherals and mainframe systems even though such units are normally installed in abutting cabinets. Cables provided with cartridge disk drives, diskette drives and paper tape reader/punches (Table B-2) have plugs and color-coded receptacles at opposite ends.

Lengths are given for cables used to interconnect free-standing peripherals and mainframe systems. Cables provided with disk storage units, card readers, user terminals, etc. (Tables B-3, sheets 1 through 3, and B-4) have plugs and color-coded receptacles at opposite ends.

Table B-1. Cabinet Mounted Peripherals

PRODUCT NUMBER(S)	PRODUCT DESCRIPTIONS	CABLE PROVIDED	CABLE LENGTH(S)
4040 4040A	MAGNETIC TAPE TRANSPORT, MOUNTS IN PERIPHERAL CABINET (PRODUCT 7520-902).	CBL 1468-101 CBL 2618-901	AS REQUIRED FOR ABUTTING CABINETS
4050 4050A	SAME AS 4040	CBL 1401-001 CBL 2618-001	AS REQUIRED FOR ABUTTING CABINETS
4051 4051A	SAME AS 4040 & 4040A	CBL 1401-001 CBL 2618-001	AS REQUIRED FOR ABUTTING CABINETS
4052 4052A	SAME AS 4040 & 4040A	CBL 2493-001 CBL 2618-001	AS REQUIRED FOR ABUTTING CABINETS
4053 4053A	SAME AS 4040 & 4040A	CBL 1489-001 CBL 2618-901	AS REQUIRED FOR ABUTTING CABINETS
4054 4054A	SAME AS 4040 & 4040A	CBL 1489-001 CBL 2618-901	AS REQUIRED FOR ABUTTING CABINETS

Table B-2. Cabinet Mountable Peripherals (Sheet 1 of 2)

PRODUCT NUMBER(S)	PRODUCT DESCRIPTION	CABLE(S) PROVIDED	CABLE LENGTH
3121 3121A	PAPER TAPE READER/PUNCH	CBL 0565-002	10 FEET
3122 3122A	PAPER TAPE READER/PUNCH	CBL 1434-002	10 FEET
3123 3123A	PAPER TAPE READER/PUNCH	CBL 1434-002	10 FEET
4205 4207 4205A 4207A	512K M BYTE FXD HD DISK	CBL 0180-002	10 FEET
4221 4224 4228 4221A 4224A 4228A	3 M BYTE MOVING HD DISK	CBL 0578-002	15 FEET
4300	DISKETTE DRIVE	CBL 1437-001 CBL 1438-001 CBL 1499-001	3 FEET (AC PS TO DISK) 3 FEET (DC PS TO DISK) 16 FEET (3 DISKETTES)
4300A	DISKETTE DRIVE	CBL 1437-001 CBL 1438-001 CBL 1499-002	3 FEET (AC PS TO DISK) 3 FEET (DC PS TO DISK) 15 FEET (2 DISKETTES)

Table B-2. Cabinet Mountable Peripherals (Sheet 2 of 2)

PRODUCT NUMBER(S)	PRODUCT DESCRIPTIONS	CABLE(S) PROVIDED	CABLE LENGTH(S)
4302 4302A	DISKETTE DRIVE	CBL 1437-001 CBL 1438-001 CBL 1499-001	3 FEET 3 FEET 18 FEET (4 DISKETTES)
4304 4304A	DISKETTE DRIVE	CBL 1499-001	18 FEET (4 DISKETTES)
4310 4310A	DISKETTE DRIVE	CBL 1437-001 CBL 1438-001 CBL 1499-001	3 FEET 3 FEET 15 FEET (3 DISKETTES)
4314 4314A	DISKETTE DRIVE	CBL 1499-003	18 FEET (4 DISKETTES)

Table B-3. Free-Standing Peripherals (Sheet 1 of 3)

PRODUCT NUMBER(S)	PRODUCT DESCRIPTION	CABLE PROVIDED	CABLE LENGTH
3127 & 3127A	SERIAL INTERFACE PRINTER	CBL 1449-001	10 FEET
3133 3134 3133A 3134A	SERIAL INTERFACE PRINTER	CBL 1449-001	10 FEET
3202 3205 3202A 3205A	PRINTER/PLOTTER	CBL 2320-901	
3135 3145 3149 3135A 3145A 3149A	LINE PRINTER	CBL 1454-001	40 FEET
3136 3137 3140 3142 3146 3147 3150 3157	CHAIN PRINTER	CBL 1454-001	40 FEET

Table B-3. Free-Standing Peripherals (Sheet 2 of 3)

PRODUCT NUMBER(S)	PRODUCT DESCRIPTION	CABLE PROVIDED	CABLE LENGTH
3136A 3137A 3140A 3142A 3146A 3147A 3150A 3157A	CHAIN PRINTER	CBL 1454-001	40 FEET
3138 3148 3138A 3148A	BAND PRINTER	CBL 1454-001	40 FEET
3158 3158A	CARD READER PUNCH	CBL 1496-901	20 FEET
3159 3159A	CARD READER	CBL 1323-001	15 FEET

Table B-3. Free-Standing Peripherals (Sheet 3 of 3)

PRODUCT NUMBER (S)	PRODUCT DESCRIPTION	CABLE PROVIDED	CABLE LENGTH (S)
4261 426A	80M BYTE DISK DRIVE	CBL 1475-901 CBL 1479-901 CBL 2618-902	10 FEET (DAISY CHAIN) 7 FEET (SAFETY GROUND)
4262 4262A	80M BYTE DISK DRIVE	CBL 1481-901 CBL 2618-901	10 FEET (DAISY CHAIN) 7 FEET (SAFETY GROUND)
4263 4263A	80M BYTE DISK DRIVE	CBL 1479-901 CBL 1481-901 CBL 2618-901	10 FEET (DAISY CHAIN) 7 FEET (SAFETY GROUND)
4264 4264A	80M BYTE DISK DRIVE	CBL 1481-901 CBL 2618-901	10 FEET (DAISY CHAIN) 7 FEET (SAFETY GROUND)
4271 4271A	300M BYTE DISK DRIVE	CBL 1475-901 CBL 1479-901 CBL 2618-902	20 FEET (SAFETY GROUND)
4272 4272A	300M BYTE DISK DRIVE	CBL 1481-901 CBL 2618-902	10 FEET (DAISY CHAIN) 7 FEET (SAFETY GROUND)
4273 4273A	300M BYTE DISK DRIVE	CBL 1479-901 CBL 1481-901 CBL 2618-901	10 FEET (DAISY CHAIN) 7 FEET (SAFETY GROUND)
4274 4274A	300M BYTE DISK DRIVE	CBL 1481-901 CBL 2618-901	10 FEET (DAISY CHAIN) 7 FEET (SAFETY GROUND)

Table B-4. Teletypes, Terminets and User Terminals

PRODUCT NUMBER(S)	PRODUCT DESCRIPTION	CABLES	CABLE LENGTHS
3101 3103 3101A 3103A	TELETYPEWRITER(ASR#33) TELETYPEWRITER(KSR#33)	CBL 1457-001 CBL 1450-001	25 FEET 25 FEET
3111 3133 3111A 3113A	TERMINET #30	CBL 1449-002	30 FEET
3129 3129A	USER TERMINAL (CRT TYPE)	CBL 1449-001	10 FEET

APPENDIX C

LAYOUT TEMPLATES

Layout templates for applicable products currently marketed by Prime are presented herein. When preparing a site layout, the customer superimposes selected templates on a matrix grid that represents his computer room. A detailed explanation of template usage is included in Section 2 of this User Guide. (Refer to the SPECIFIC EXAMPLE.)

The various symbols used to define the products represented by the layout templates are hereby explained:

CABLE ENTRY, MACHINE BASE

CASTOR

LEVELING PAD

POWER CORD EXIT

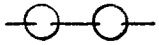
SERVICE AREA BOUNDARY

EQUIPMENT OUTLINE

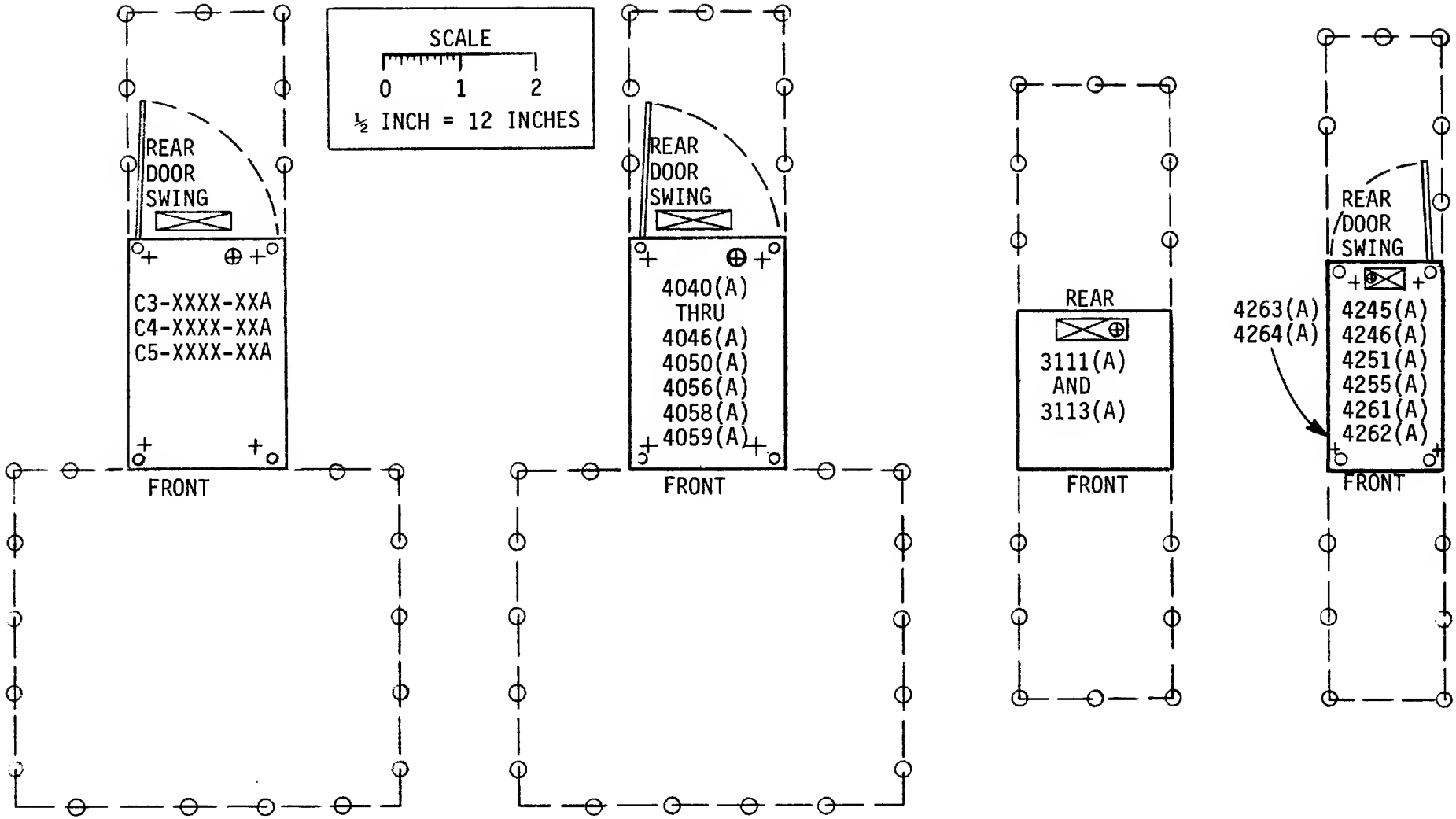

Figure C-1. Layout Templates (Sheet 1 of 5)

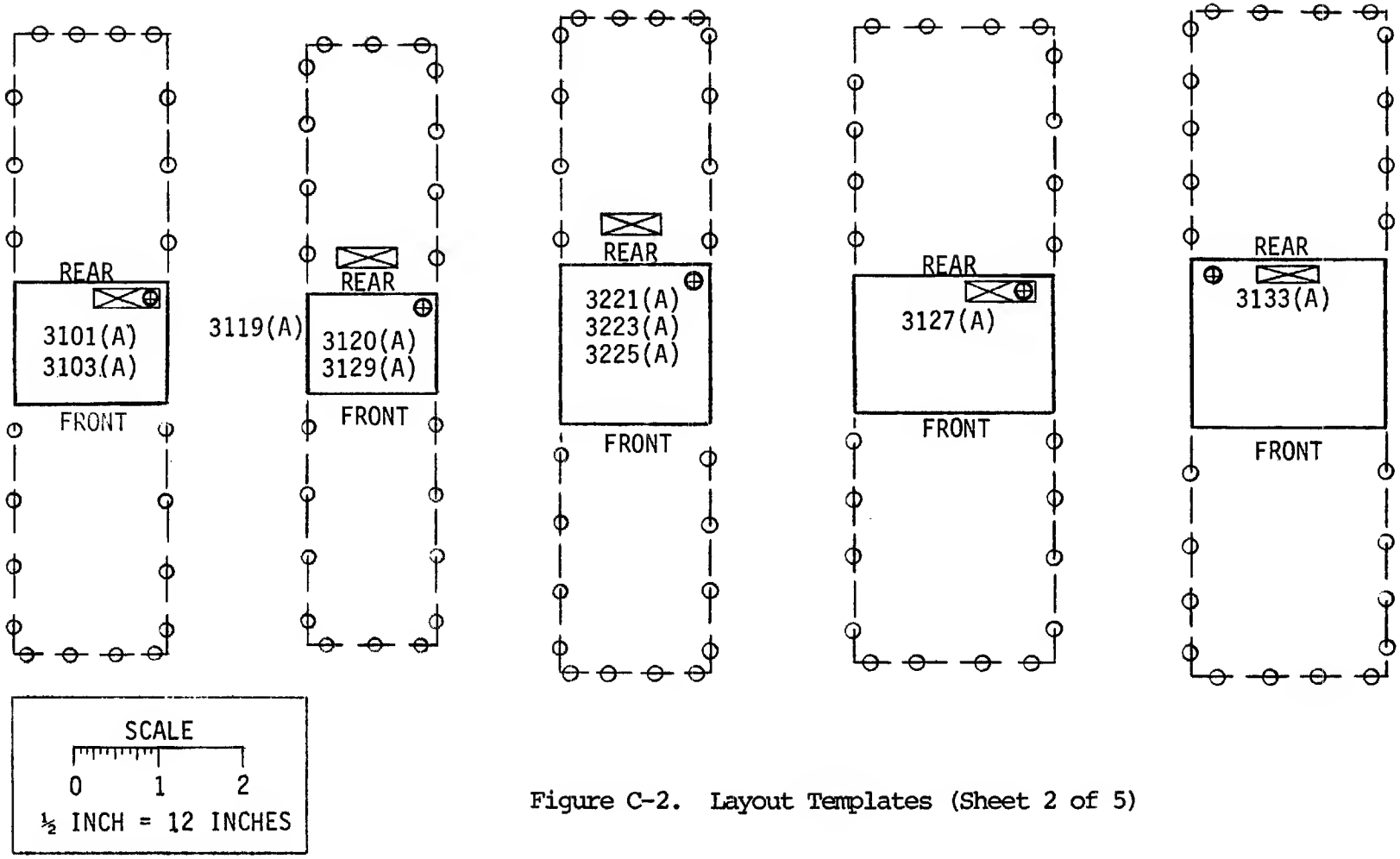

Figure C-2. Layout Templates (Sheet 2 of 5)

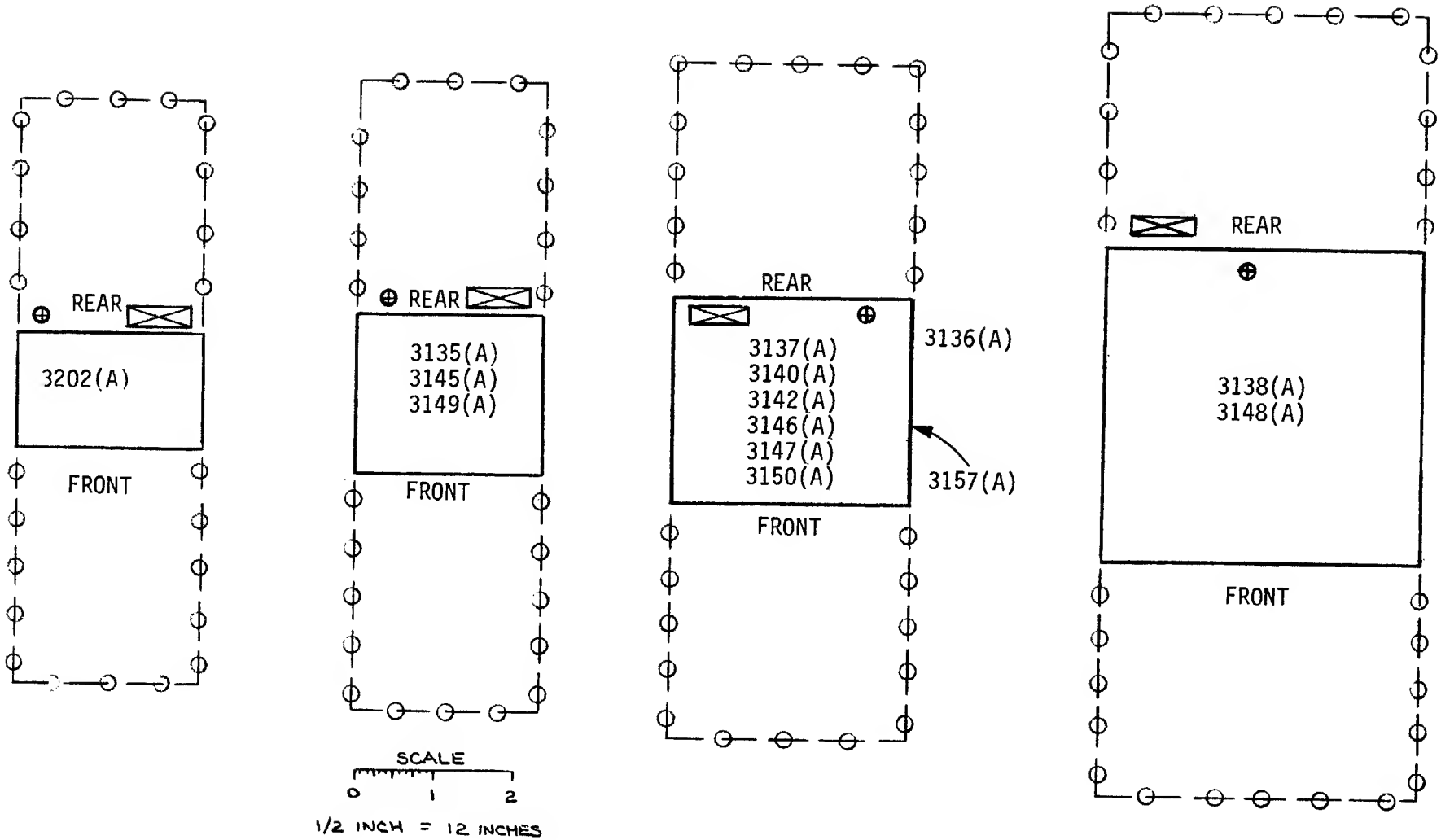

Figure C-3. Layout Templates (Sheet 3 of 5)

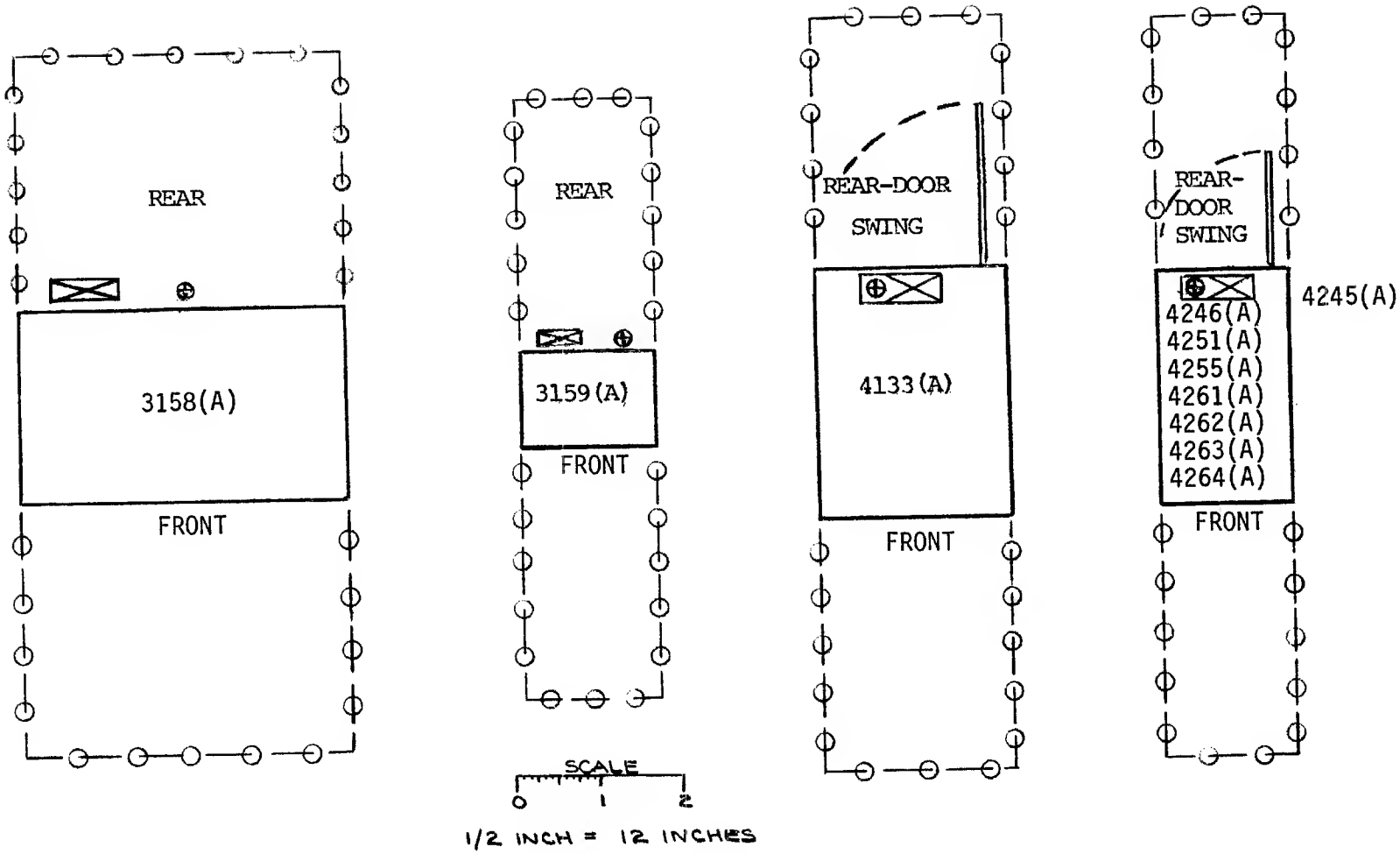

Figure C-4. Layout Templates (Sheet 4 of 5)

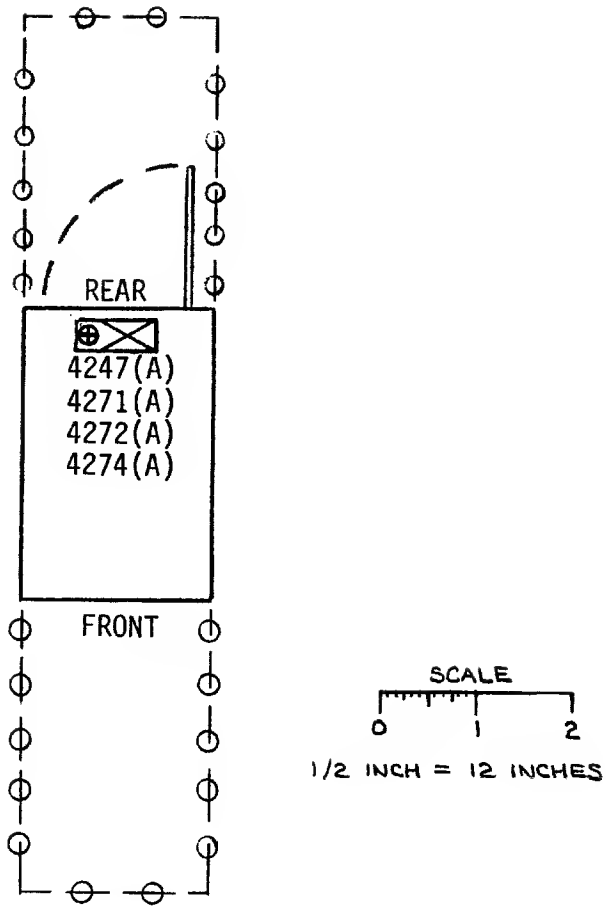

Figure C-5. Layout Templates (Sheet 5 of 5)

APPENDIX D

GROUNDING SPECIFICATION

Power System Grounding Requirements

The site AC power system must have provisions for correct equipment safety grounding. All of the following conditions must be met:

1. The branch circuit supplying AC power to each piece of equipment must have safety ground provisions. Therefore, this circuit must include an insulated grounding conductor that is identical to the grounded and ungrounded branch circuit conductors. The insulated grounding conductor shall be green or green with a yellow stripe.

2. The grounding conductor specified in 1 is to be grounded at the service equipment.

3. All power receptacles (including convenience outlets for oscilloscopes and other test equipment) must be at a common ground potential to prevent shock hazards if two equipments are touched simultaneously. Therefore, all attachment plug receptacles in the vicinity of the system components are to be connected to the same grounding conductor that serves the system components.

4. Only components mounted in a particular cabinet may plug into that cabinets power distribution unit.